Supplementary Figure 1. Branching lineage of the mouse bronchial tree.

(Top panels) The lineage shows derivations of 5051 branches in the developing mouse lung that were reconstructed from the branch patterns of fixed, immunostained lungs from E11 up to E15 as described in Supplementary Methods. Dots at the right and left of each panel show the positions of branch generations 0 - 9, and can be used as guides for aligning and assembling the 29 panels into a single lineage figure; the aligned and assembled figure is included as **Supplementary Figure 1'**. For each panel, the name of the lineage shown is given at the top left of the panel and its initials are highlighted in bold face and the lineage line extended in the overview map at the bottom of the panel.

Based on the data available on the extent of the conducting airways in mouse and rat[1,2], the lineage appears to include all airways of the bronchial tree and, in some lineages, generations beyond the conducting airways. The name assigned to each branch is based on the lobar origin of the branch or its standard orientation, with the full name given by the names of all of its progenitors, separated by periods. The left (L) and right (R) 1º branches form off the ventral foregut at E9.5, before the separation of the trachea and esophagus. Note that the three 2º branches off the right 1º branch (R.Cr, R.Md, R.Ac) and their descendants form separate lobes. However, not all lobar airways are 2º branches: the left lobe is formed by the left 1º branch (L) and its descendants, and the RCd lobe is formed by the distal portion of the right 1º branch (RCd) and its descendants.

(Bottom panels) Timing of branching events during development. Branching lineage diagram as above but with the name of each branch highlighted according to key at bottom to indicate when it forms during development: white text in box, branches formed by E11; black text in box, E12; grey text in box, E13; bold black text, E14; grey text,

E15. The temporal data are based on five representative specimens, one from each day of development from E11-E15, and is not absolute because there is variability among specimens in the local rate of progression through the lineage (see text and Supplementary Fig. 2).

Blue bar, branches within a domain; red bar, round of orthogonal bifurcation; green bar, round of planar bifurcation (see text and Fig. 2). A, anterior; D, dorsal; L, lateral; M, medial; P, posterior; V, ventral; *, orientation can vary; X and Y, domains in RMd and RAc lobes oriented as shown in key on pages 7 and 11**;** pr, proximal and di, distal along the axis off which a domain branch has formed. Where domains along a parent branch are known to be used in a stereotyped order (parent branches RCd, L, R.Ac R.Md, L.L1, RCd.L1 and the "optional" lineages), domains are shown from left to right in the order used. Otherwise, domains are shown in alphabetical order.

Supplementary References

[1] Onuma, K., Ebina, M., Takahashi, T., & Nukiwa, T. Irregularity of airway branching in a mouse bronchial tree: A 3-D morphometric study. *Tohoku J Exp Med* 194 (3), 157-164 (2001).

[2] Rodriguez, M., Bur, S., Favre, A., & Weibel, E. R. Pulmonary acinus: Geometry and morphometry of the peripheral airway system in rat and rabbit. *Am J Anat* 180 (2), 143-155 (1987).

P. 1 — R.Cr.AL1 lineage

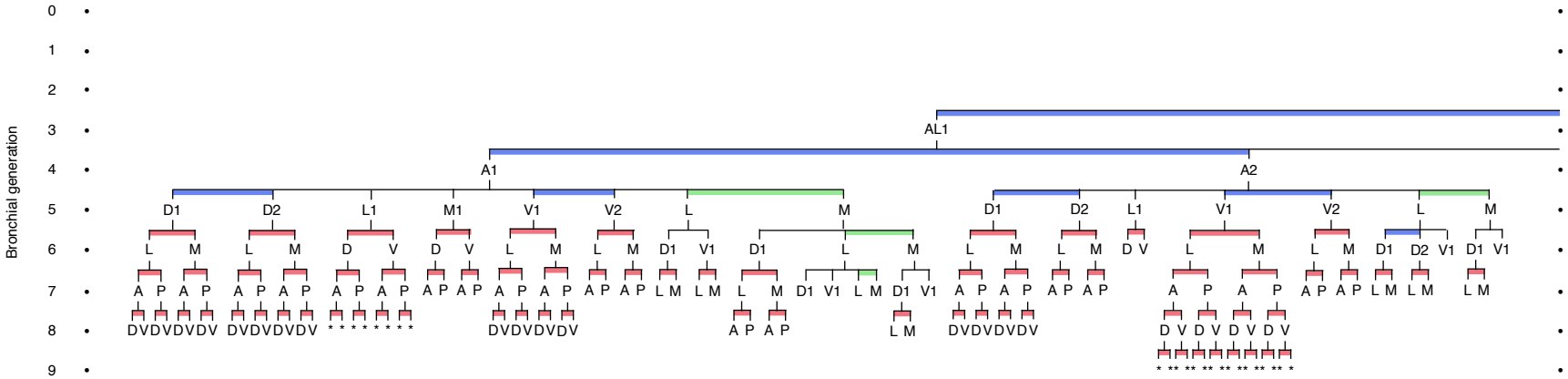

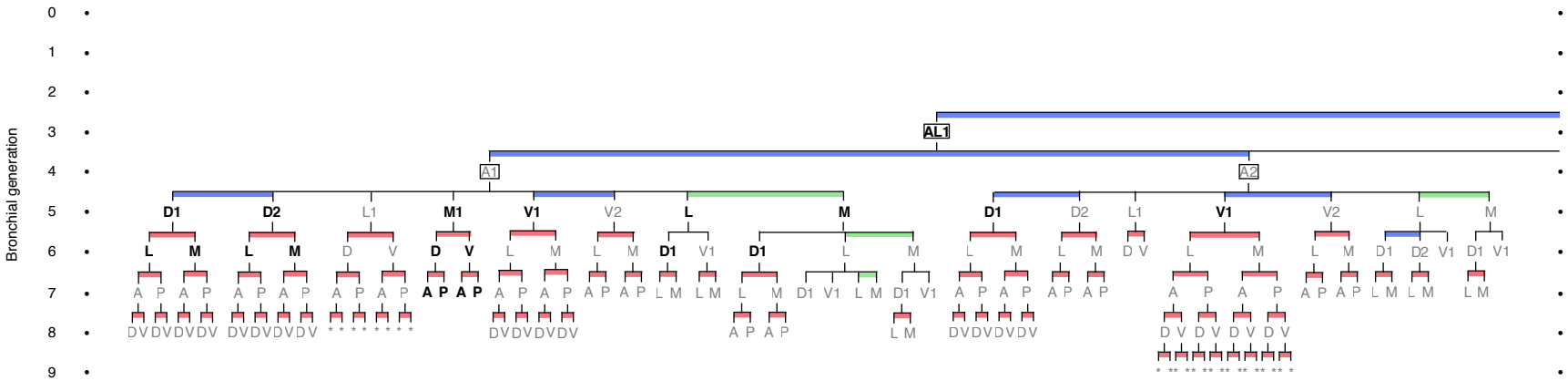

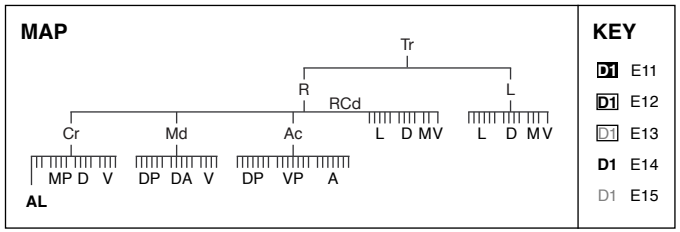

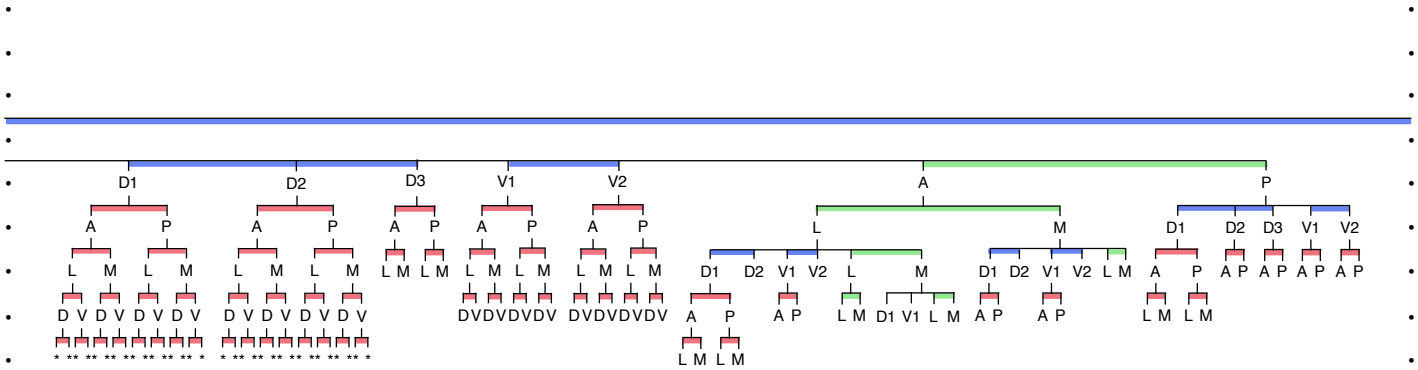

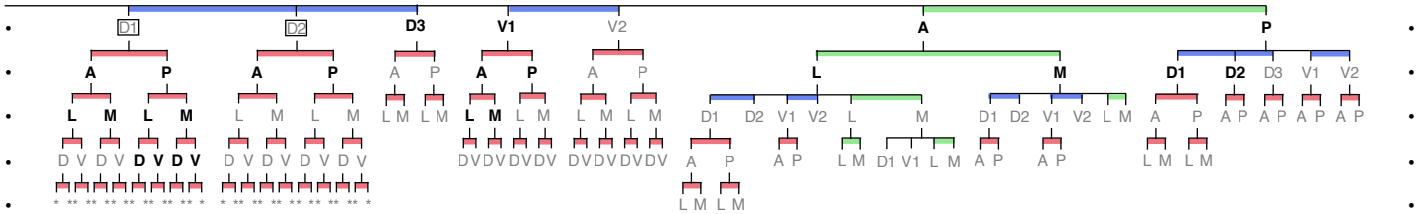

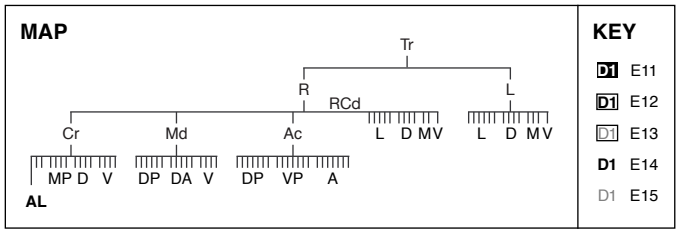

KEY

- D1 E11
- D1 E12
- D1 E13
- D1 E14
- D1 E15

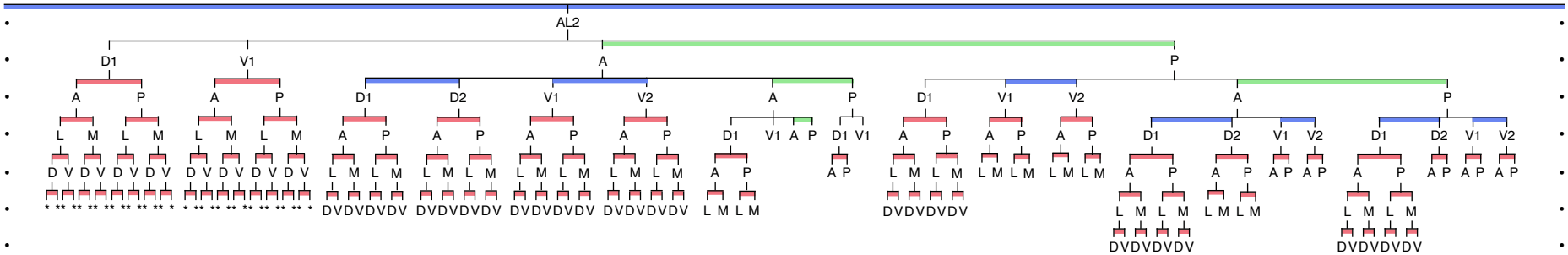
AL2
D1 V1 A P
A P A P D1 D2 V1 V2 A P D1 V1 V2 A P
L M L M L M L M A P A P A P A P D1 V1 A P D1 V1 A P A P A P D1 D2 V1 V2 D1 D2 V1 V2
D V D V D V D V D V D V D V D V L M L M L M L M L M L M L M L M A P A P A P A P A P A P A P A P
* ** ** ** ** ** ** ** * * ** ** ** ** ** ** ** * DVDVDVDV DVDVDVDV DVDVDVDV DVDVDVDV L M L M DVDVDVDV L M L M L M L M L M L M L M L M L M L M L M L M L M L M L M L M L M L M L M L M L M L M L M
DVDVDVDV DVDVDVDV

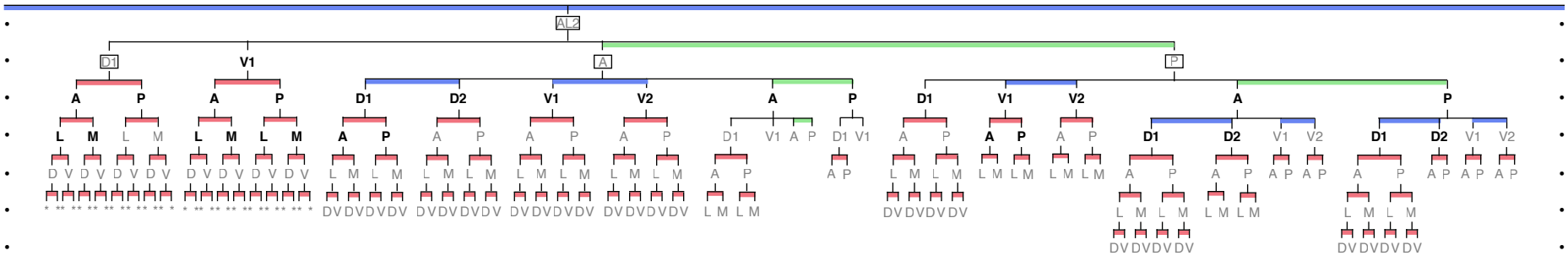
AL2
D1 V1 A P
A P A P D1 D2 V1 V2 A P D1 V1 V2 A P
L M L M L M L M A P A P A P A P D1 V1 A P D1 V1 A P A P A P D1 D2 V1 V2 D1 D2 V1 V2
D V D V D V D V D V D V D V D V L M L M L M L M L M L M L M L M A P A P A P A P A P A P A P A P
* ** ** ** ** ** ** ** * * ** ** ** ** ** ** ** * DVDVDVDV DVDVDVDV DVDVDVDV DVDVDVDV L M L M DVDVDVDV L M L M L M L M L M L M L M L M L M L M L M L M L M L M L M L M L M L M L M L M L M L M
DVDVDVDV DVDVDVDV

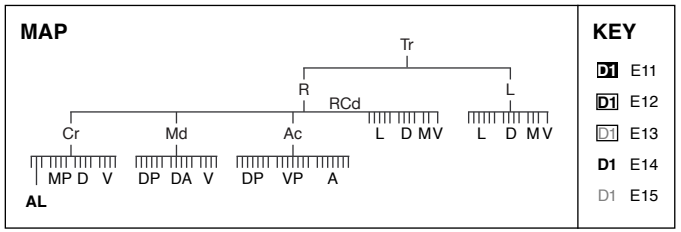
MAP
Tr
R L
RCd
Cr Md Ac L D MV L D MV
MP D V DP DA V DP VP A
AL
KEY
D1 E11
D1 E12
D1 E13
D1 E14
D1 E15

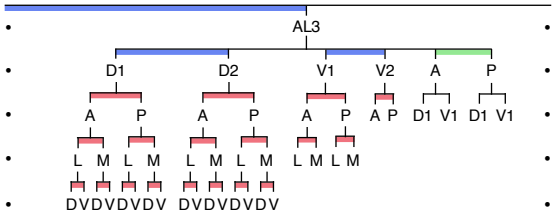
AL3
D1 D2 V1 V2 A P
A P A P A P A P D1 V1 D1 V1
L M L M L M L M L M L M
D V D V D V D V D V D V D V D V

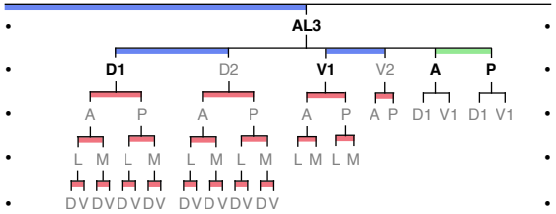
AL3
D1 D2 V1 V2 A P
A P A P A P A P D1 V1 D1 V1
L M L M L M L M L M L M
D V D V D V D V D V D V D V D V

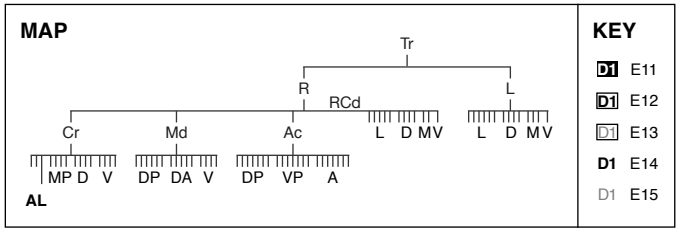
MAP
Tr
R
L
RCd
Cr
Md
Ac
L D MV
L D MV
MP D V
DP DA V
DP VP A
AL
KEY
D1 E11
D1 E12
D1 E13
D1 E14
D1 E15

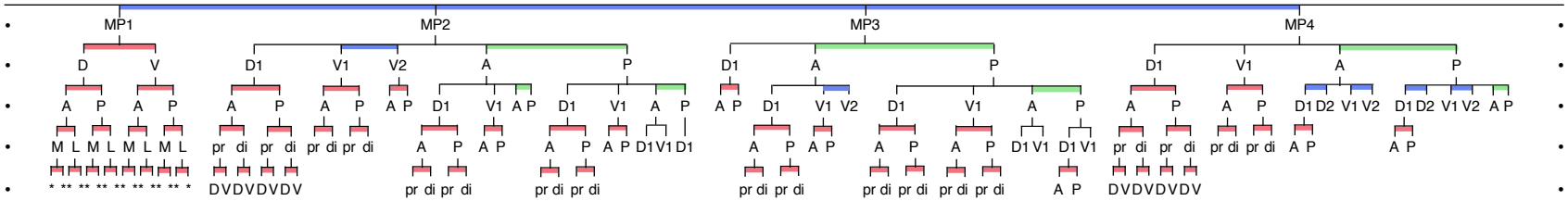
MP1
MP2
MP3
MP4

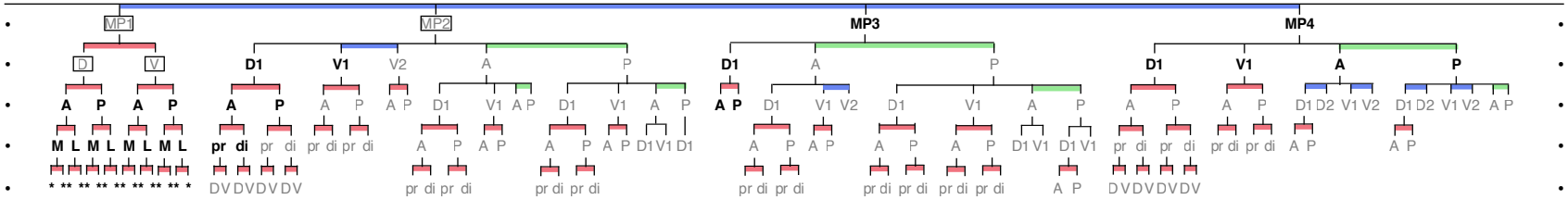
MP1
MP2
MP3
MP4

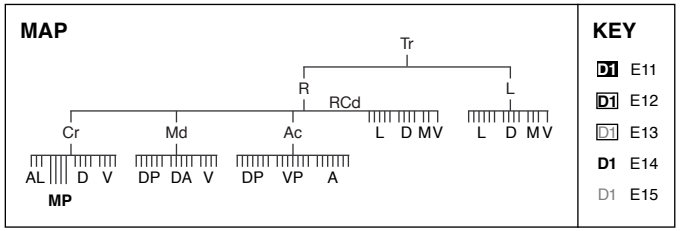
MAP
Tr
R
L
RCd
Cr
Md
Ac
L D MV
L D MV
AL
D V
DP DA V
DP VP A
MP
KEY
D1 E11
D1 E12
D1 E13
D1 E14
D1 E15

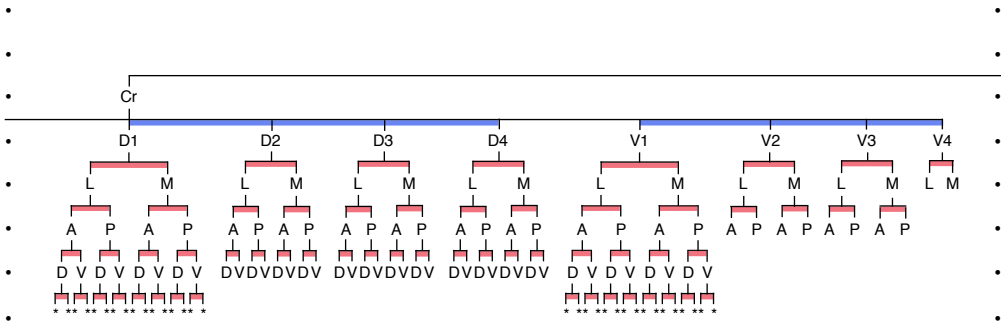

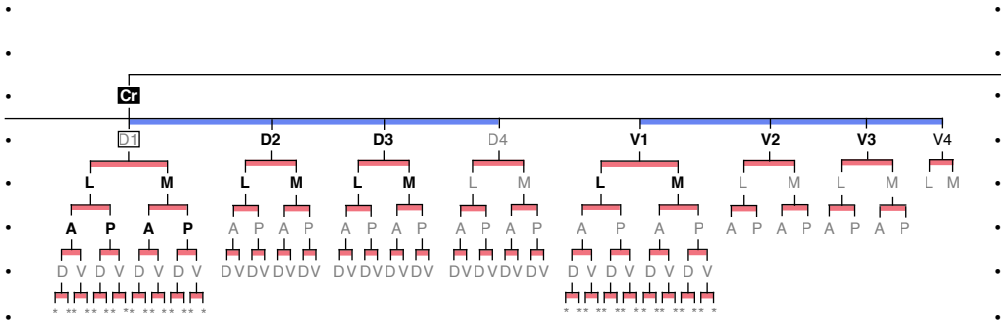

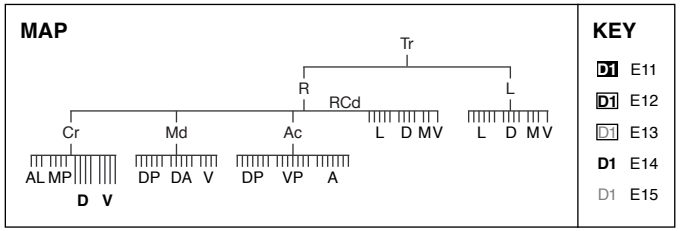

KEY

- **D1** E11
- D1 E12
- D1 E13
- **D1** E14
- D1 E15

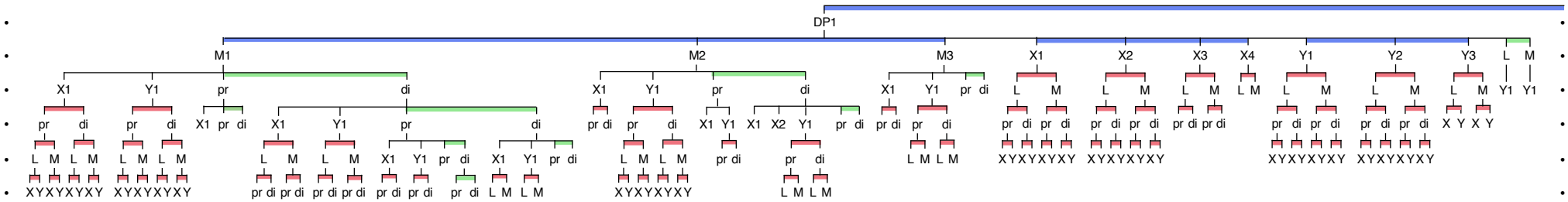
DP1
M1
M2
M3
X1
X2
X3
X4
Y1
Y2
Y3
L M
pr
di

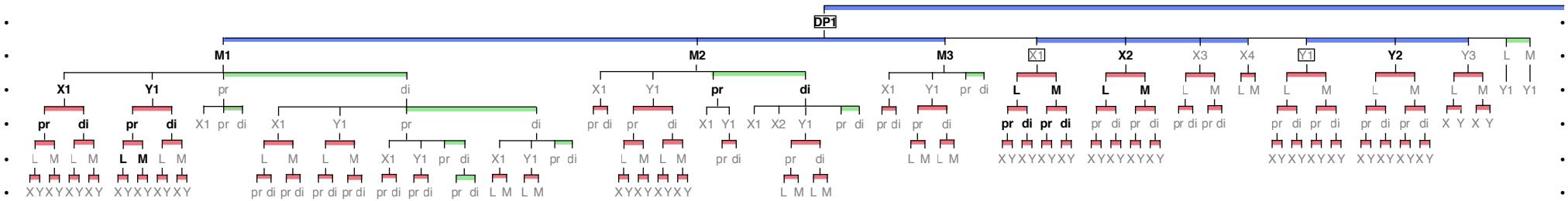
DP1
M1
M2
M3
X1
X2
X3
X4
Y1
Y2
Y3
L M
pr
di

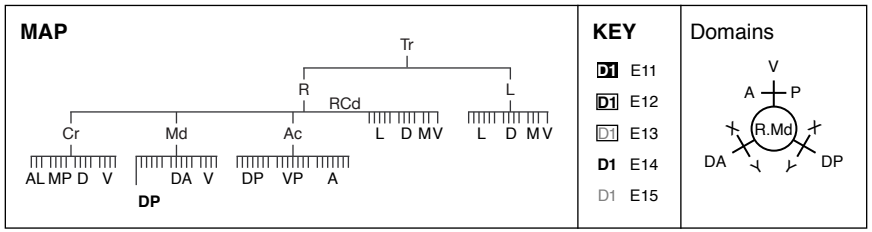
MAP
Tr
R
L
RCd
Cr
Md
Ac
L D MV
L D MV
AL MP D V
DA V
DP VP A
DP
KEY
D1 E11
D1 E12
D1 E13
D1 E14
D1 E15
Domains
V
A
P
R.Md
DA
DP

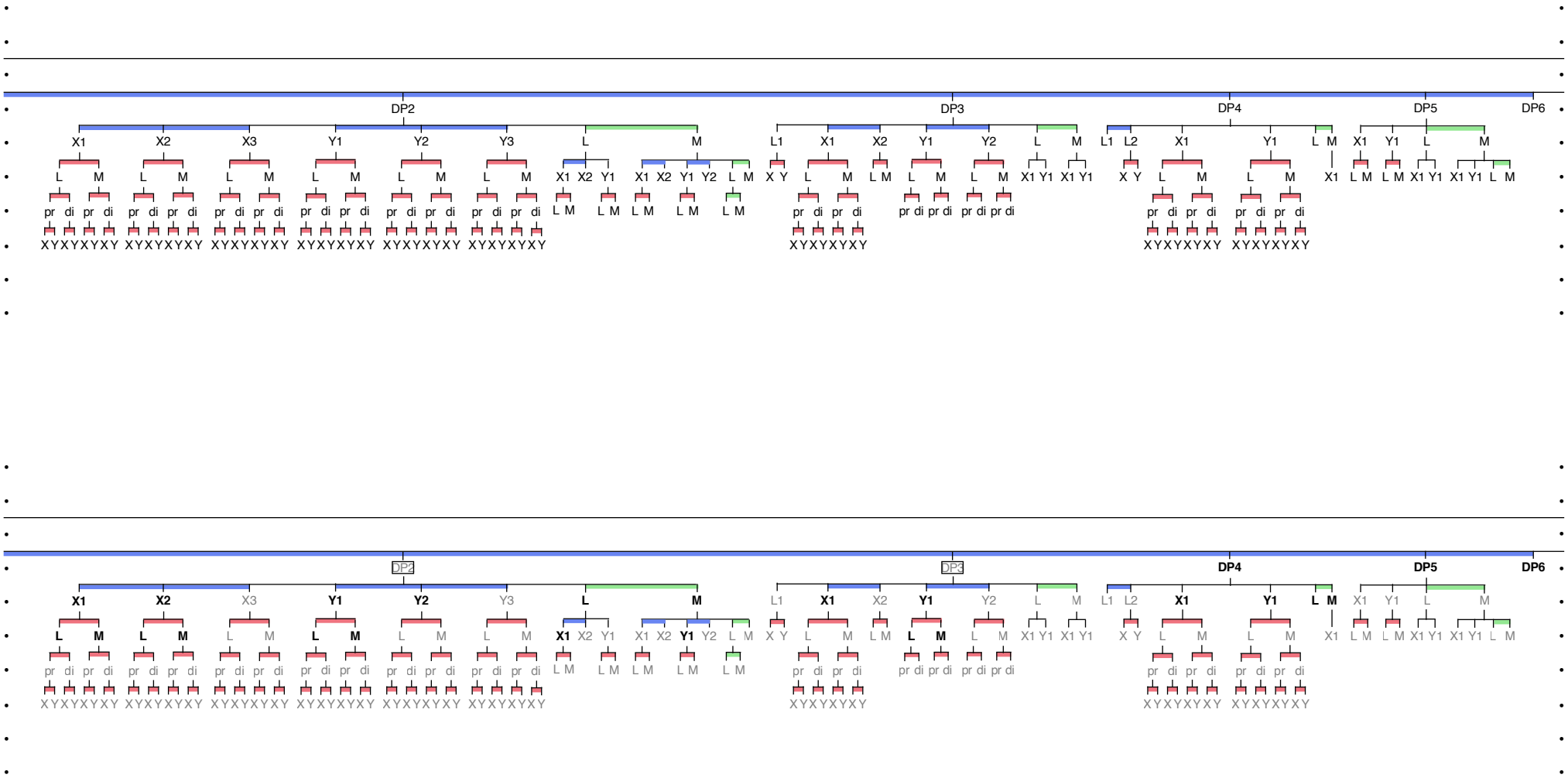
DP2
DP3
DP4
DP5
DP6
X1 X2 X3 Y1 Y2 Y3 L M
L1 X1 X2 Y1 Y2 L M
L1 L2 X1 Y1 L M
X1 Y1 L M
L M
pr di
X Y

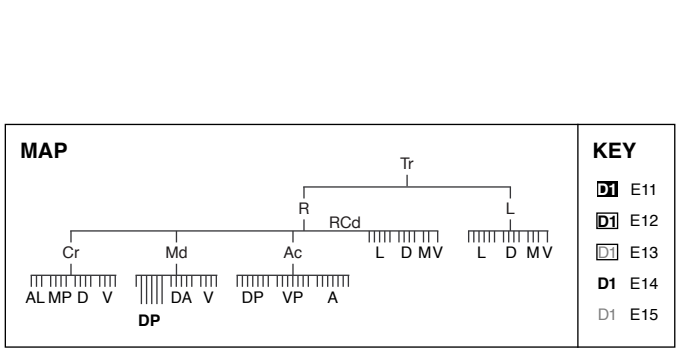
MAP
Tr
R
L
RCd
Cr
Md
Ac
L D MV
L D MV
AL MP D V
DA V
DP VP A
DP
KEY
D1 E11
D1 E12
D1 E13
D1 E14
D1 E15

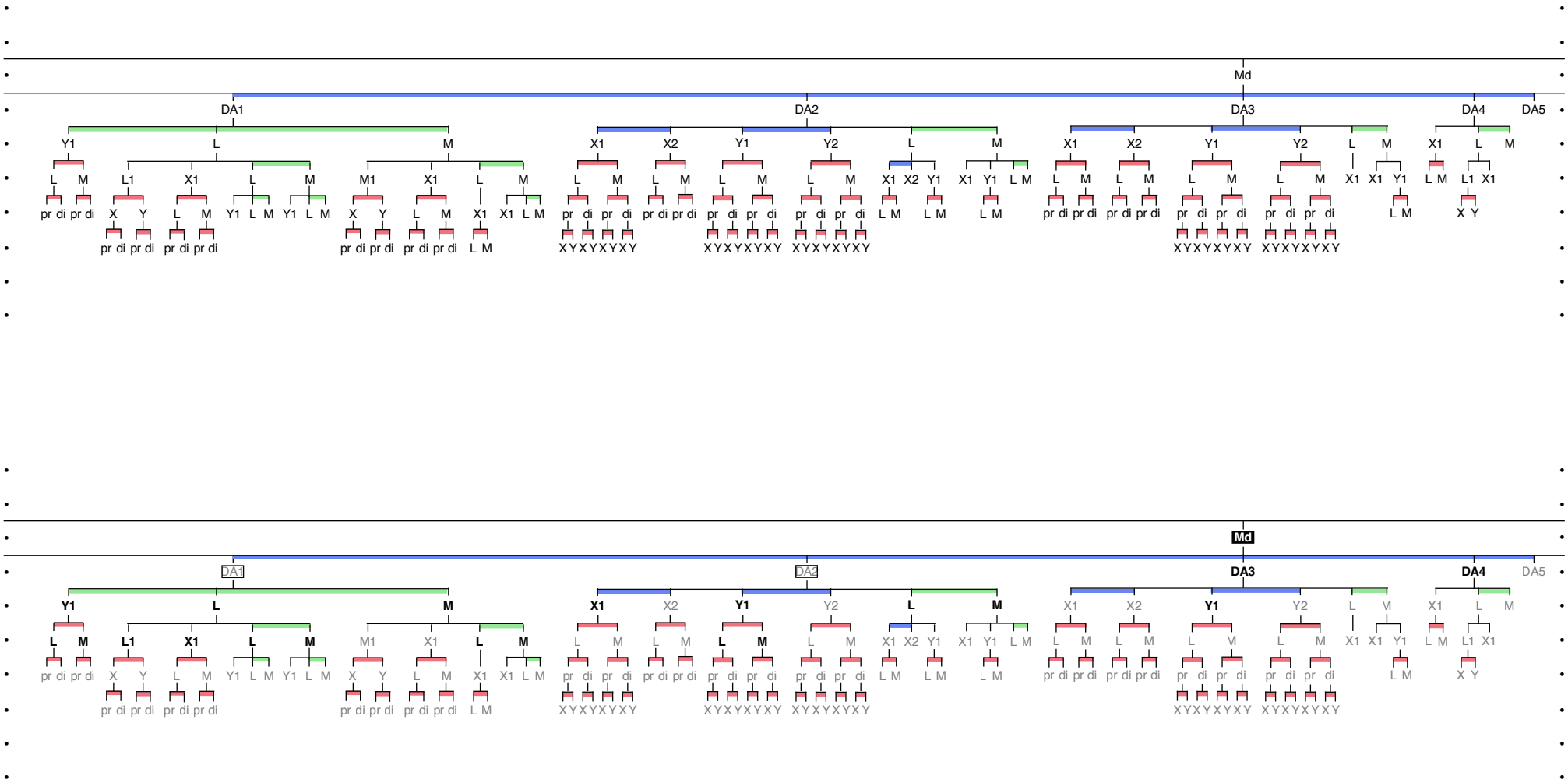
Md
DA1
DA2
DA3
DA4
DA5
Md
DA1
DA2
DA3
DA4
DA5

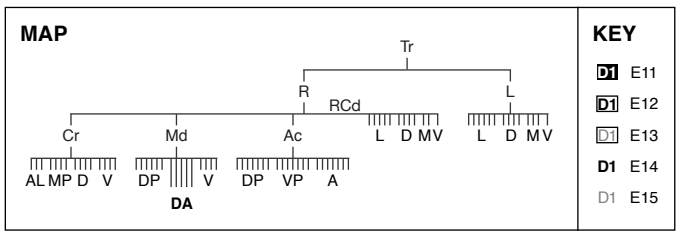
MAP
Tr
R
L
RCd
Cr
Md
Ac
L D MV
L D MV
AL MP D V
DP V
DP VP A
DA
KEY
D1 E11
D1 E12
D1 E13
D1 E14
D1 E15

P. 10 — R.Md.V1-4 lineages and optional lineage R.Md.D1

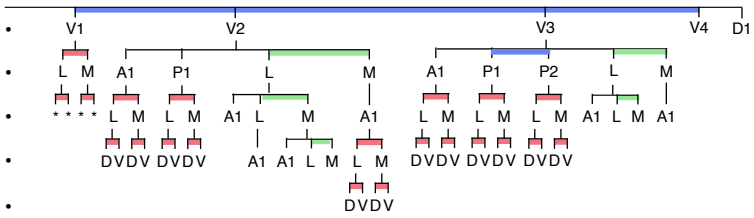

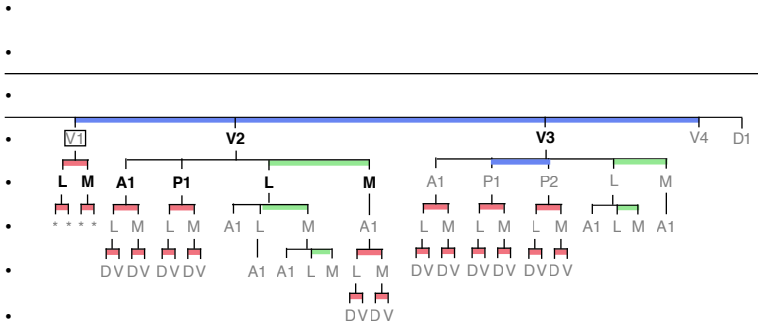

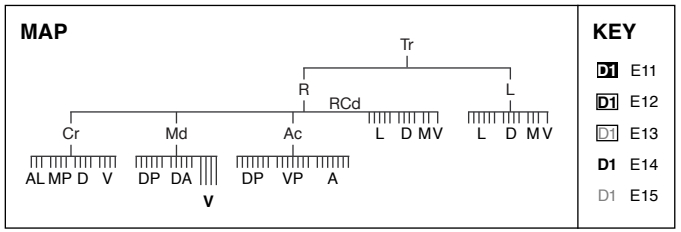

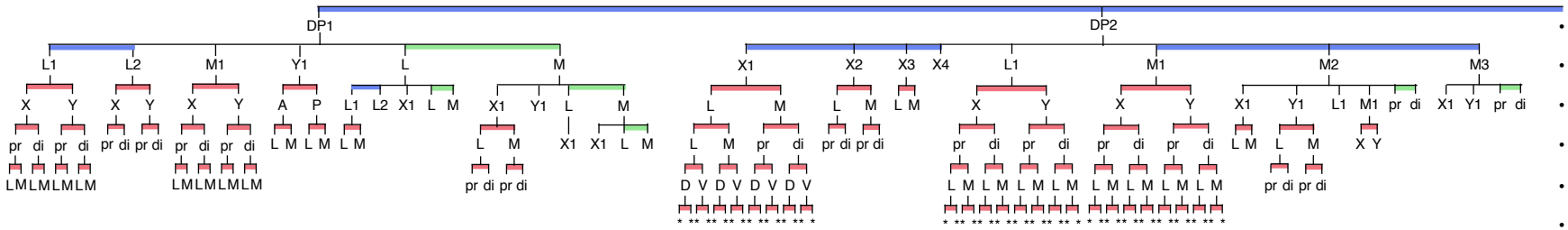
DP1
DP2
L1 L2 M1 Y1 L M
X1 X2 X3 X4 L1 M1 M2 M3

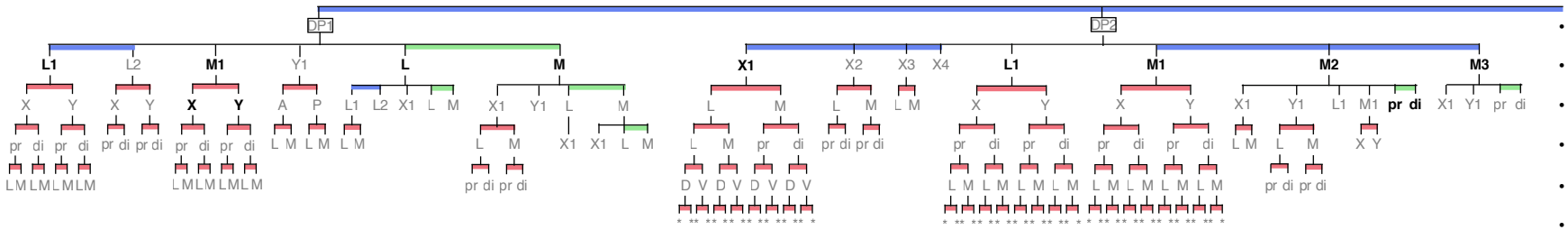
DP1
DP2
L1 L2 M1 Y1 L M
X1 X2 X3 X4 L1 M1 M2 M3

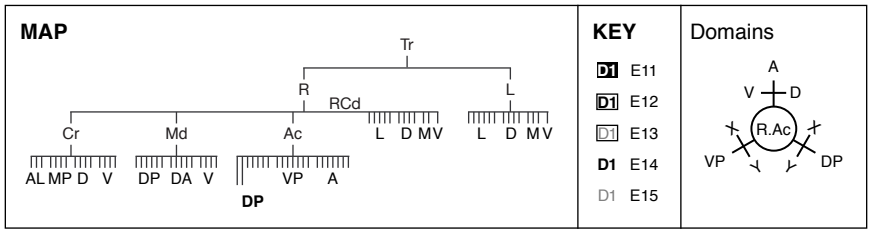
MAP
Tr
R
L
RCd
Cr
Md
Ac
L D MV
L D MV
AL MP D V
DP DA V
VP A
DP
KEY
D1 E11
D1 E12
D1 E13
D1 E14
D1 E15
Domains
A
V
D
R.Ac
VP
DP

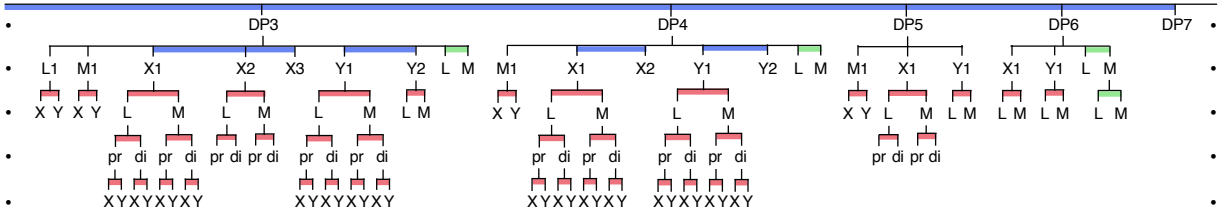
DP3
DP4
DP5
DP6
DP7
L1 M1 X1 X2 X3 Y1 Y2 L M
M1 X1 X2 Y1 Y2 L M
M1 X1 Y1
X1 Y1 L M
X Y X Y L M L M L M L M
X Y L M L M
X Y L M L M
L M L M L M
pr di pr di pr di pr di pr di pr di
pr di pr di
pr di pr di
pr di pr di
XYXYXYXY
XYXYXYXY
XYXYXYXY
XYXYXYXY

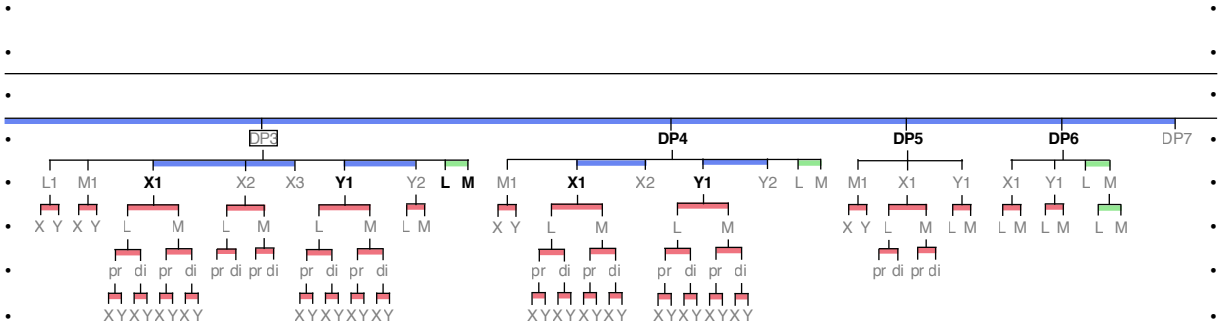
DP3
DP4
DP5
DP6
DP7
L1 M1 X1 X2 X3 Y1 Y2 L M
M1 X1 X2 Y1 Y2 L M
M1 X1 Y1
X1 Y1 L M
X Y X Y L M L M L M L M
X Y L M L M
X Y L M L M
L M L M L M
pr di pr di pr di pr di pr di pr di
pr di pr di
pr di pr di
pr di pr di
XYXYXYXY
XYXYXYXY
XYXYXYXY
XYXYXYXY

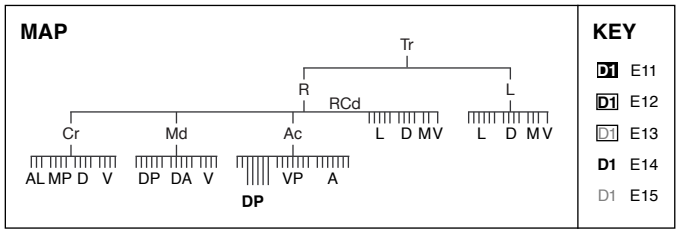
MAP
Tr
R
L
RCd
Cr
Md
Ac
L D MV
L D MV
AL MP D V
DP DA V
VP A
DP
KEY
D1 E11
D1 E12
D1 E13
D1 E14
D1 E15

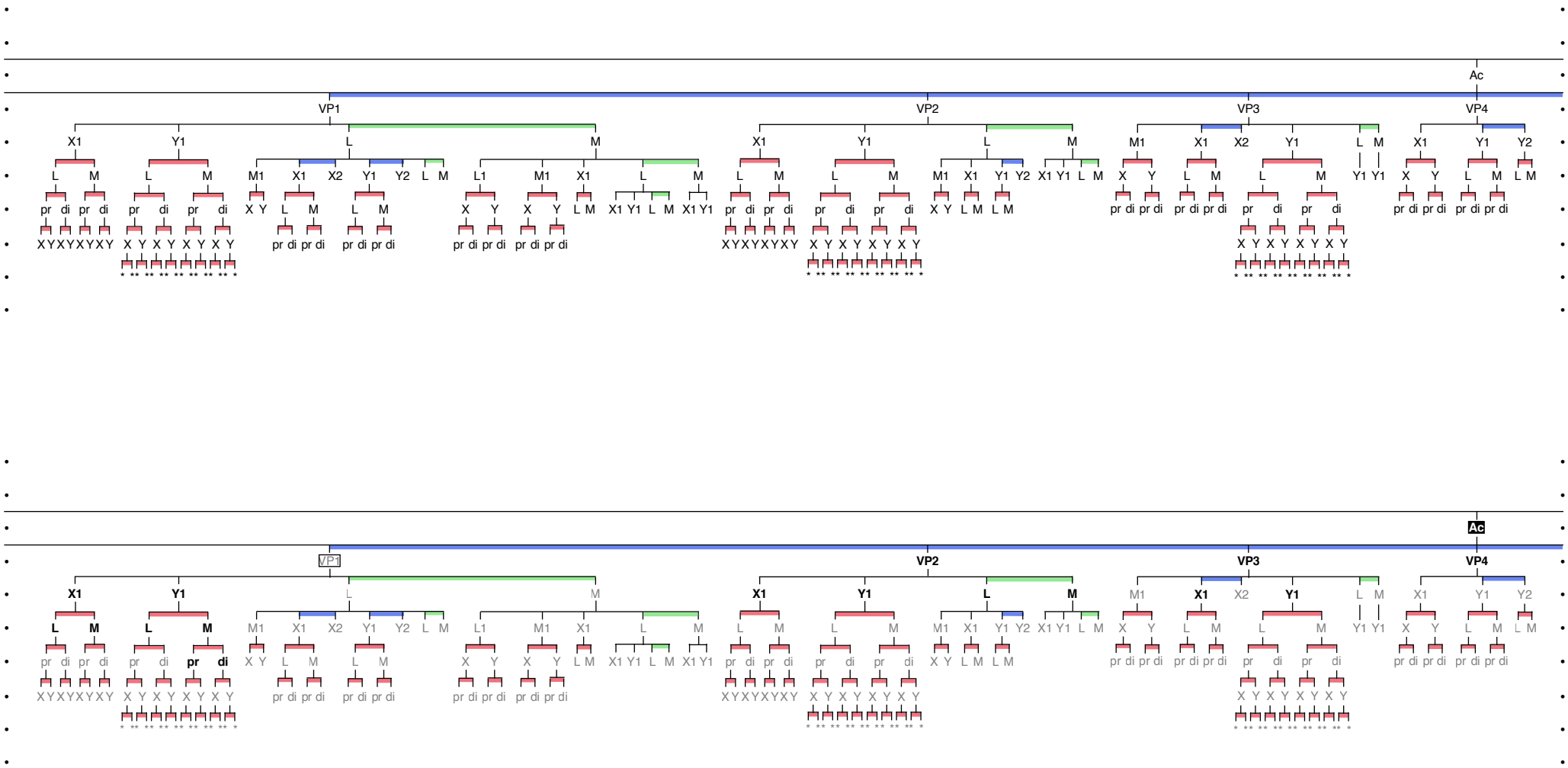
Ac
VP1
VP2
VP3
VP4
X1 Y1 L M
L M L M
pr di pr di pr di pr di
X Y X Y X Y X Y X Y X Y X Y X Y
* ** ** ** ** ** ** ** *
M1 X1 X2 Y1 Y2 L M
X Y L M L M
pr di pr di pr di pr di
L1 M1 X1 L M
X Y X Y L M X1 Y1 L M X1 Y1
pr di pr di pr di pr di
Y1 Y2 X1 Y1 L M
X Y L M L M
Y1 Y1
X Y L M L M
Ac
VP1
VP2
VP3
VP4

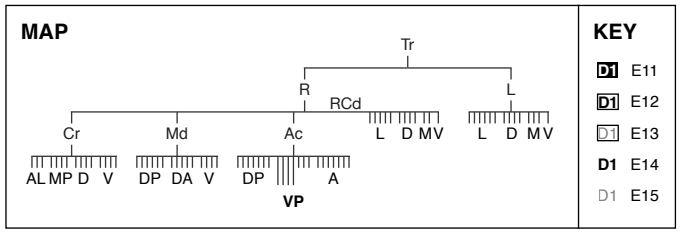
MAP
Tr
R
L
RCd
Cr
Md
Ac
L D MV
L D MV
AL MP D V
DP DA V
DP
A
VP
KEY
D1 E11
D1 E12
D1 E13
D1 E14
D1 E15

P. 14 — R.Ac.VP5-7 lineages

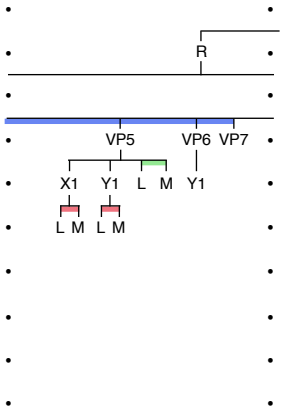

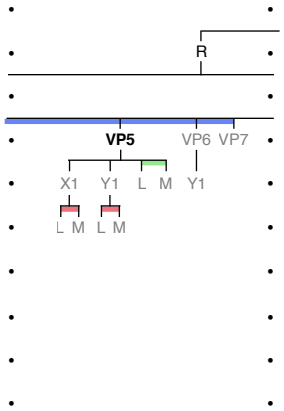

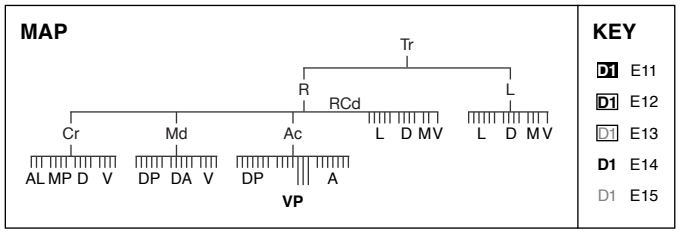

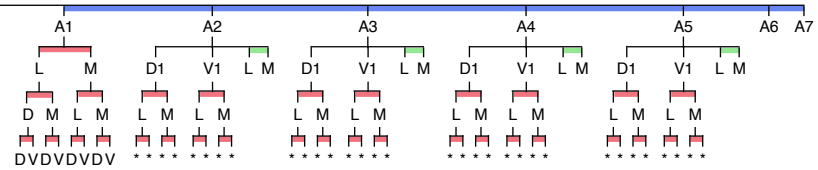
A1
A2
A3
A4
A5
A6
A7
L
M
D1
V1
L M
D M L M
L M L M
L M L M
L M L M
L M L M
L M L M
DVDVDVDV
* * * *

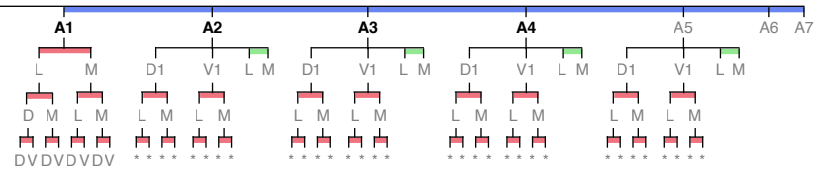
A1
A2
A3
A4
A5
A6
A7
L
M
D1
V1
L M
D M L M
L M L M
L M L M
L M L M
L M L M
L M L M
DVDVDVDV
* * * *

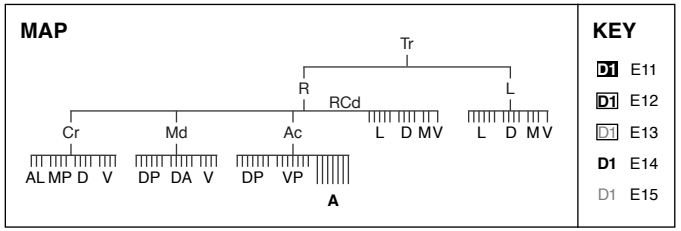
MAP
Tr
R
L
RCd
Cr
Md
Ac
L D MV
L D MV
AL MP D V
DP DA V
DP VP
A
KEY
D1 E11
D1 E12
D1 E13
D1 E14
D1 E15

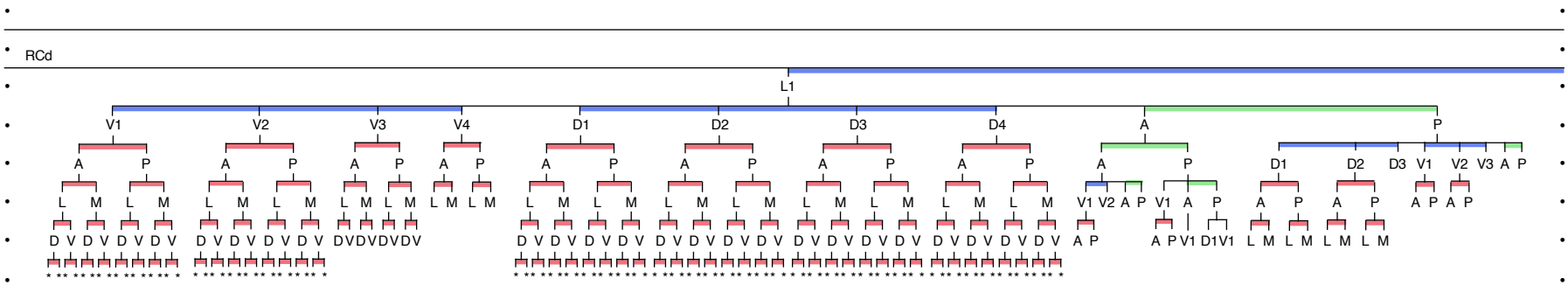

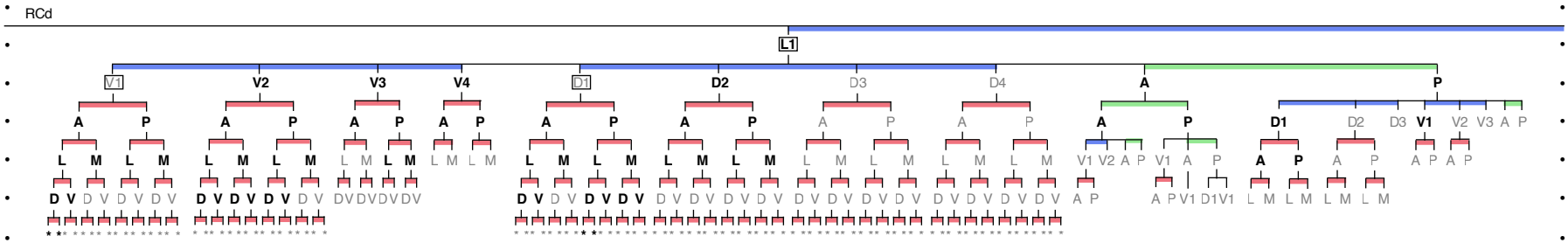

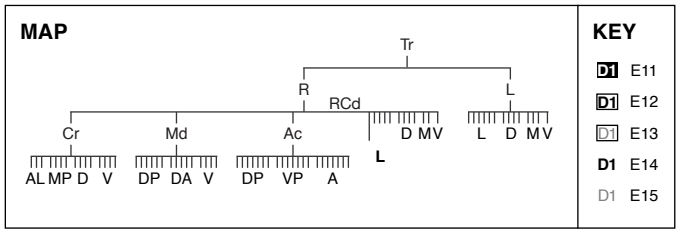

KEY

D1	E11
D1	E12
D1	E13
D1	E14
D1	E15

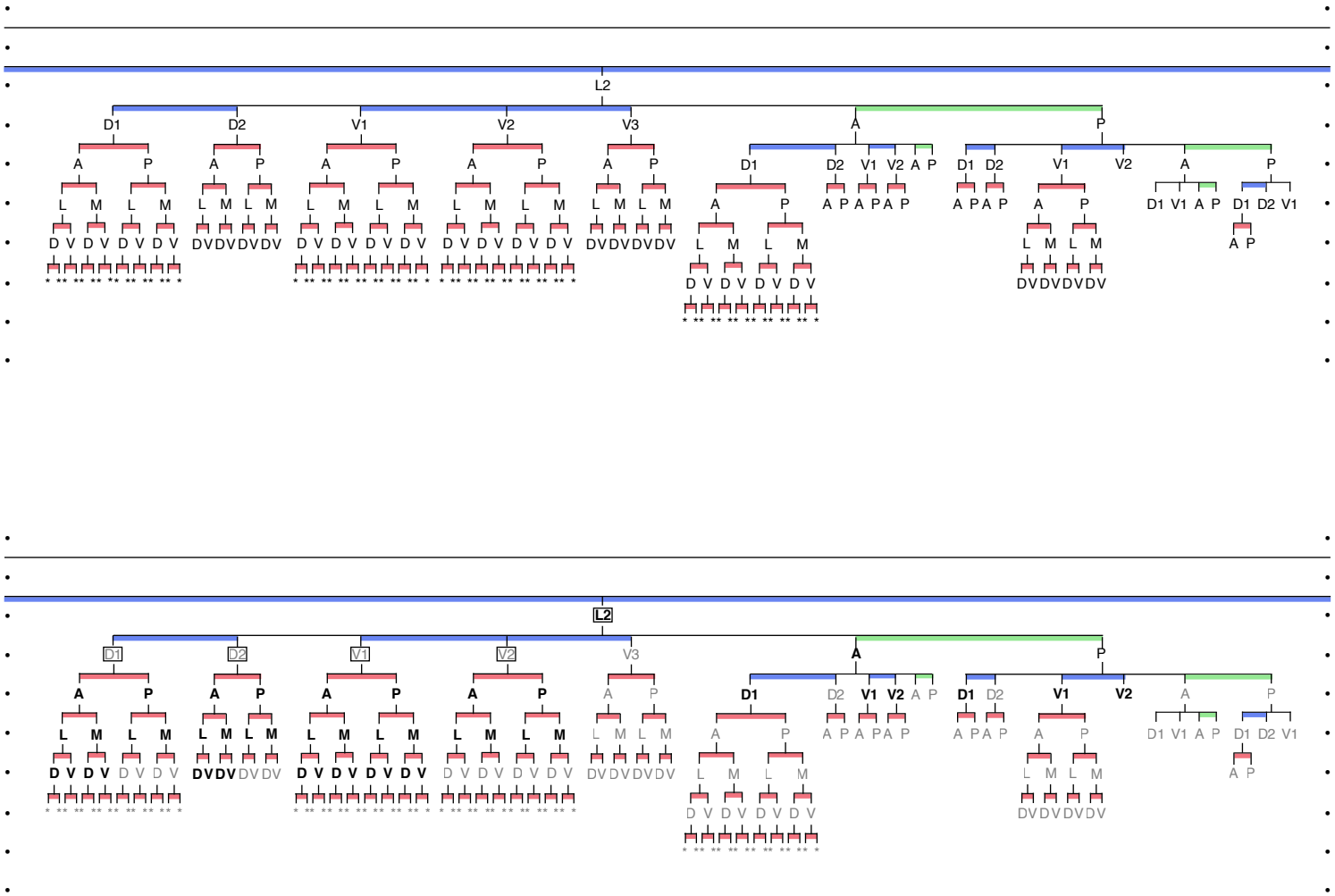

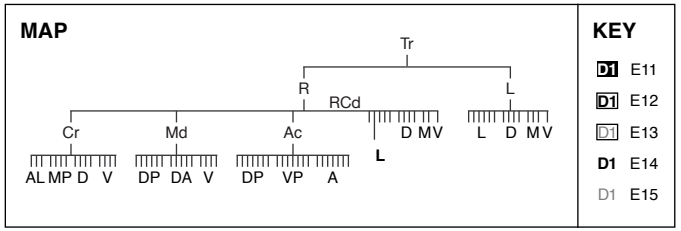

KEY

D1	E11
D1	E12
D1	E13
D1	E14
D1	E15

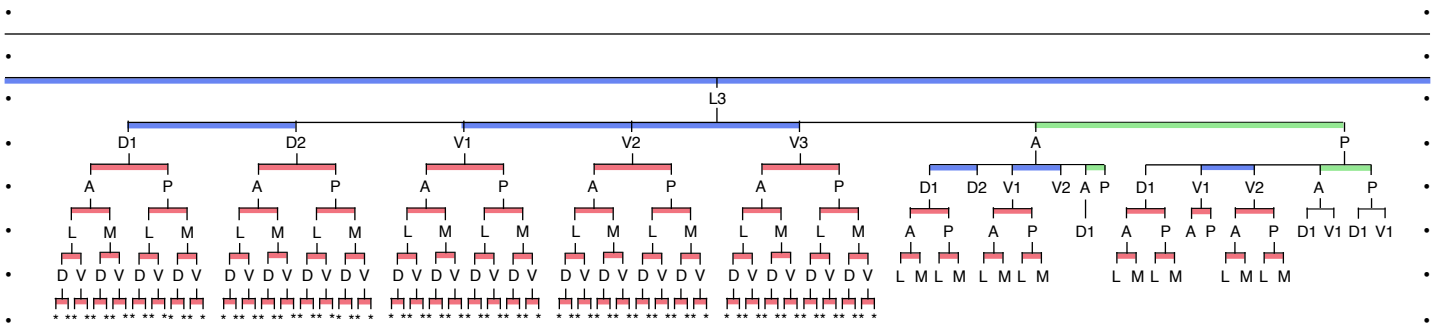

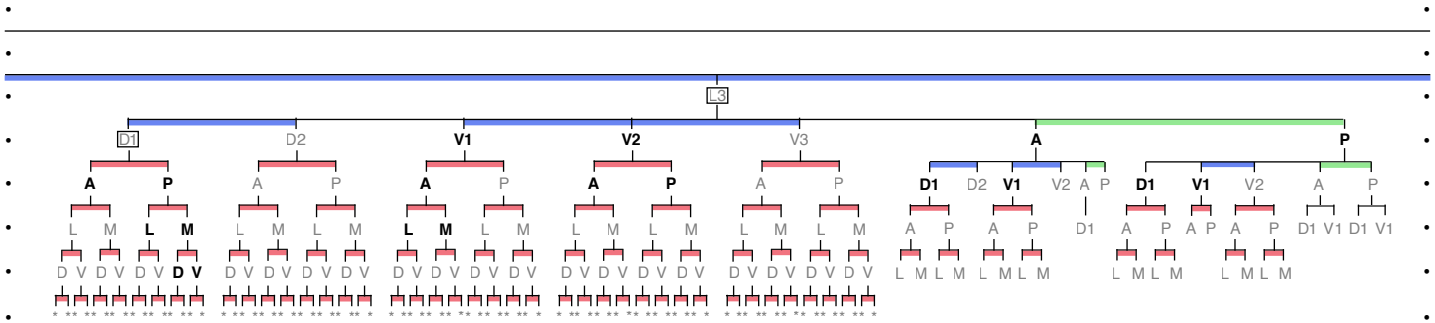

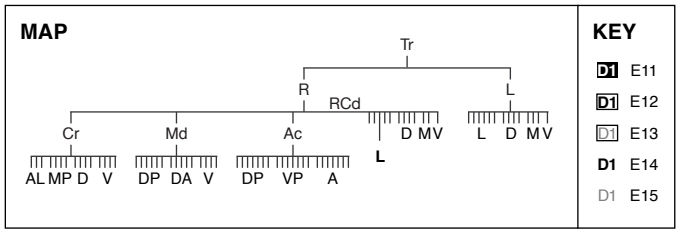

KEY

D1	E11
D1	E12
D1	E13
D1	E14
D1	E15

P. 19 — RCd.L4 lineage

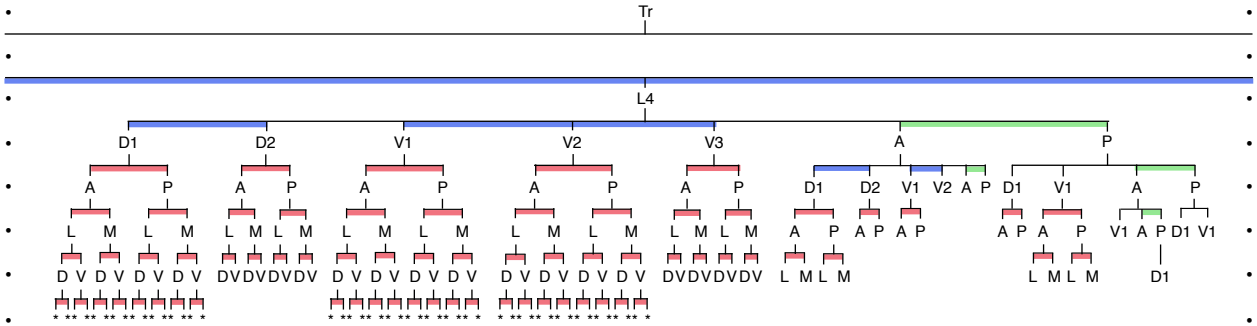

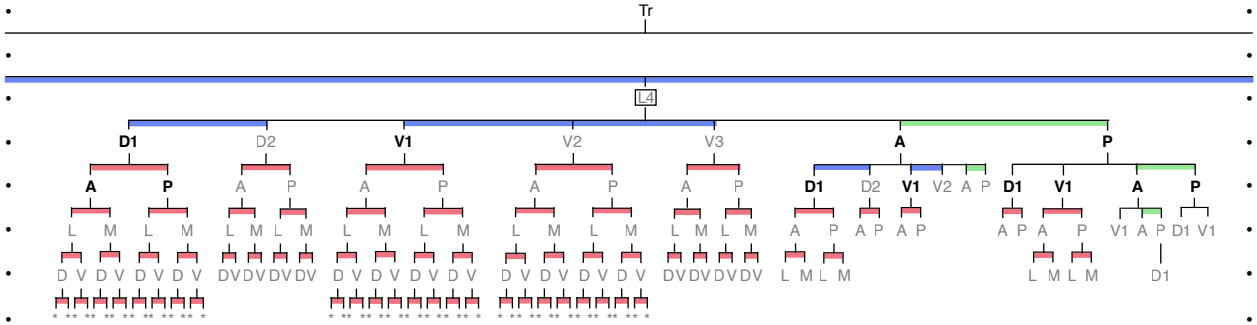

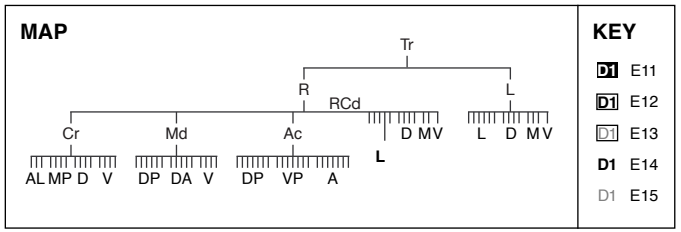

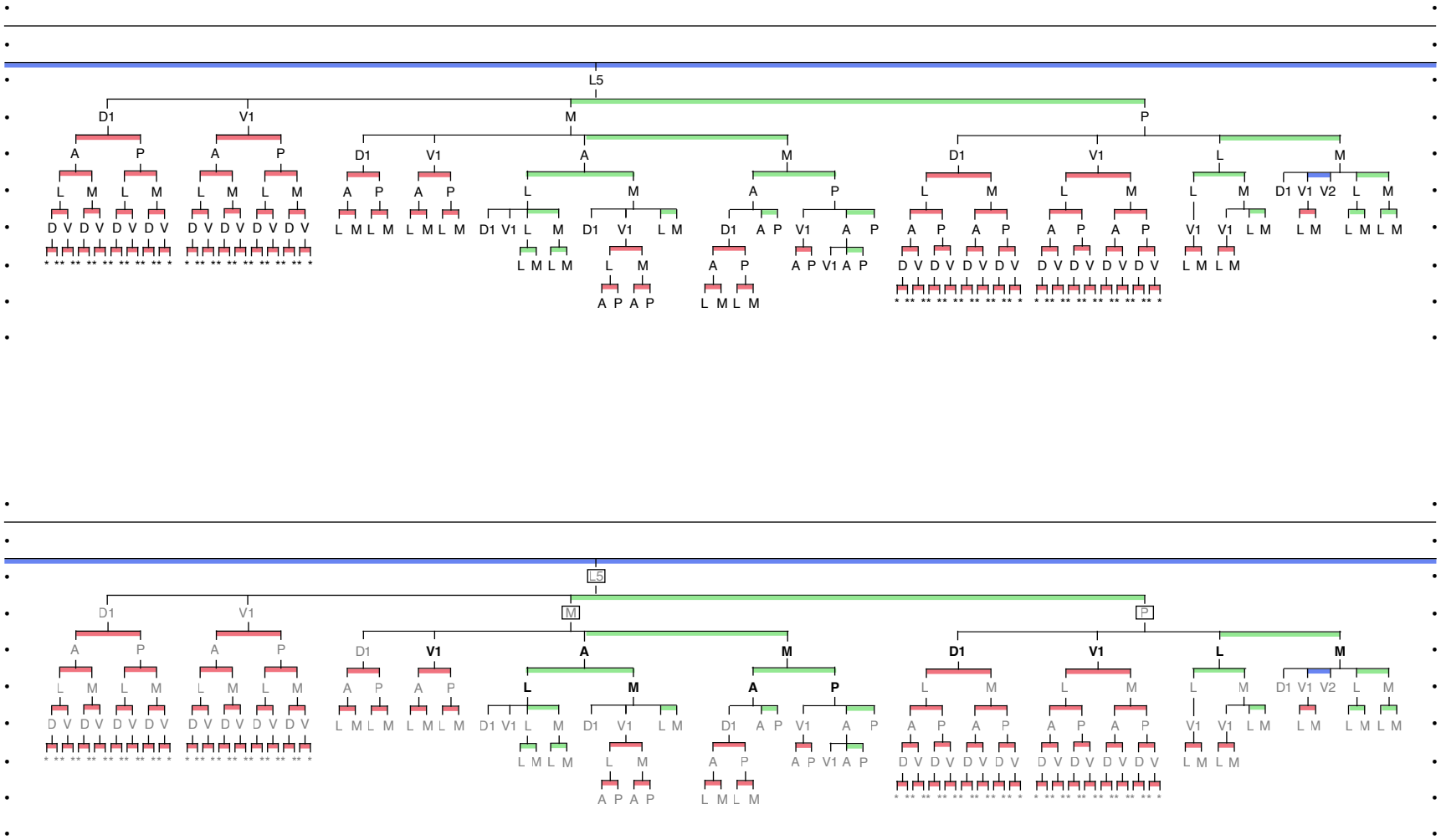
L5
D1 V1 M P
A P A P D1 V1 A M D1 V1 L M
L M L M L M

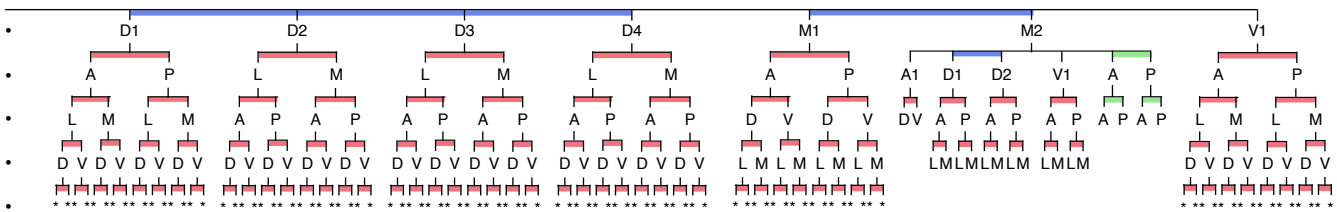

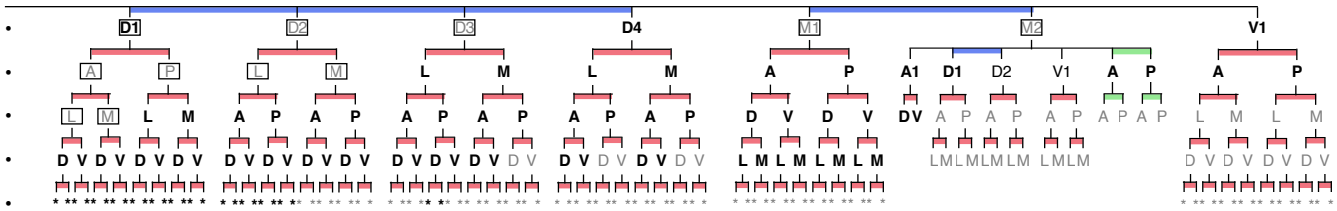

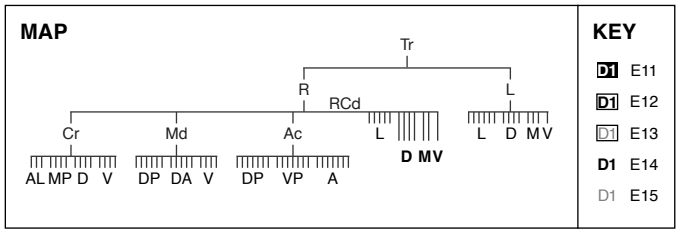

KEY

D1	E11
D1	E12
D1	E13
D1	E14
D1	E15

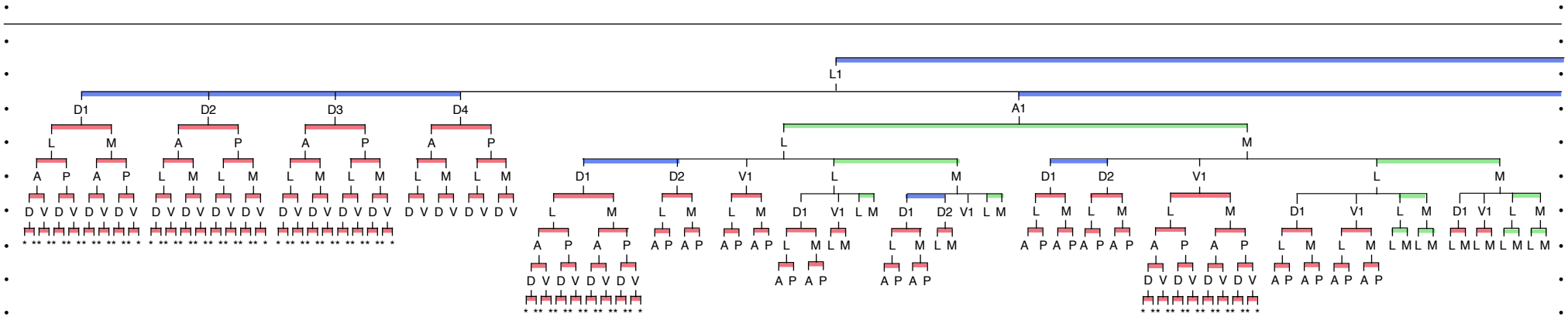
L1
D1 D2 D3 D4
A1
L M
A P
D V

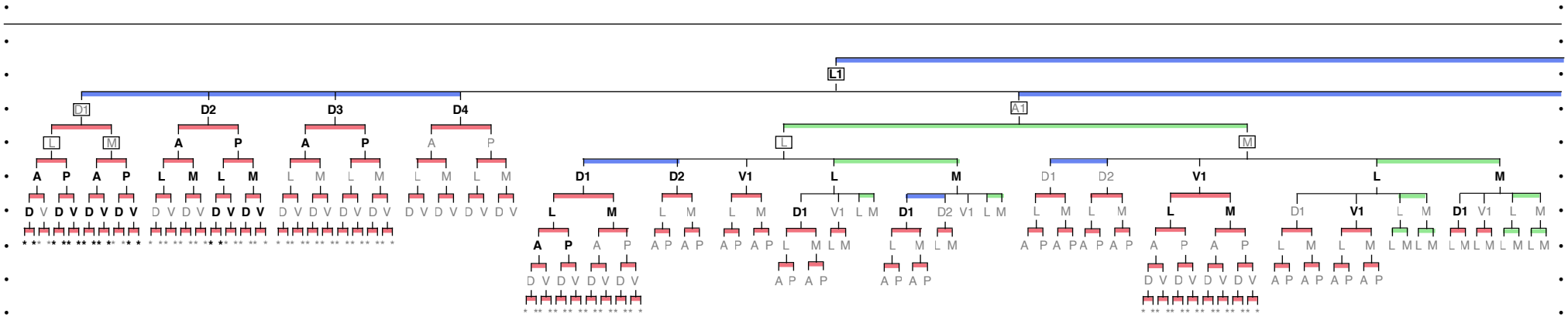
L1
D1 D2 D3 D4
A1
L M
A P
D V

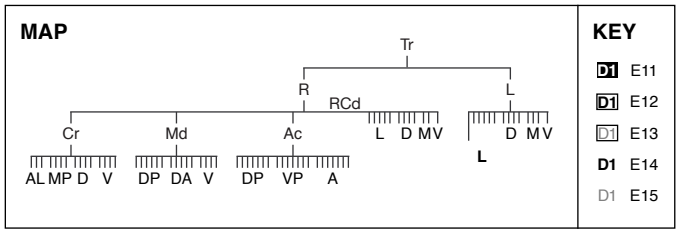
MAP
Tr
R
L
RCd
Cr
Md
Ac
L D MV
D MV
L
AL MP D V
DP DA V
DP VP A
KEY
D1 E11
D1 E12
D1 E13
D1 E14
D1 E15

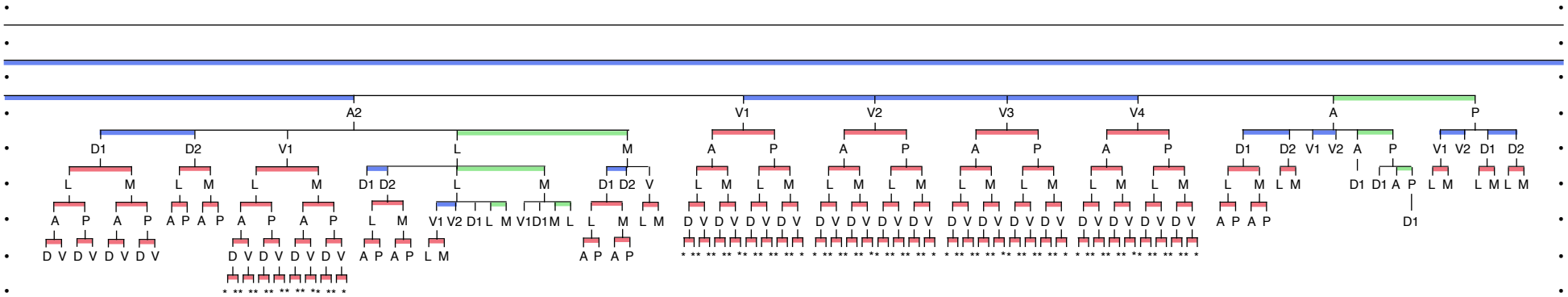
A2
V1
V2
V3
V4
A
P

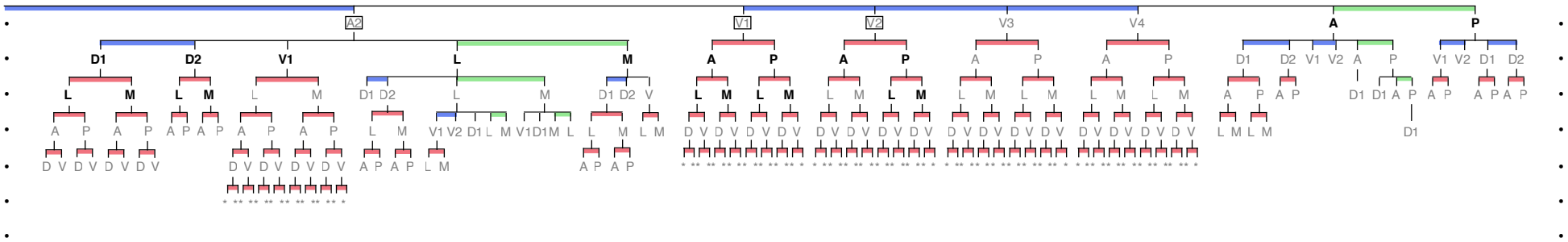
A2
V1
V2
V3
V4
A
P

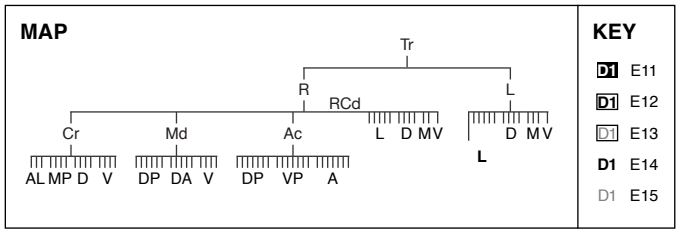
MAP
Tr
R
L
RCd
Cr
Md
Ac
L D MV
D MV
L
AL MP D V
DP DA V
DP VP A
KEY
D1 E11
D1 E12
D1 E13
D1 E14
D1 E15

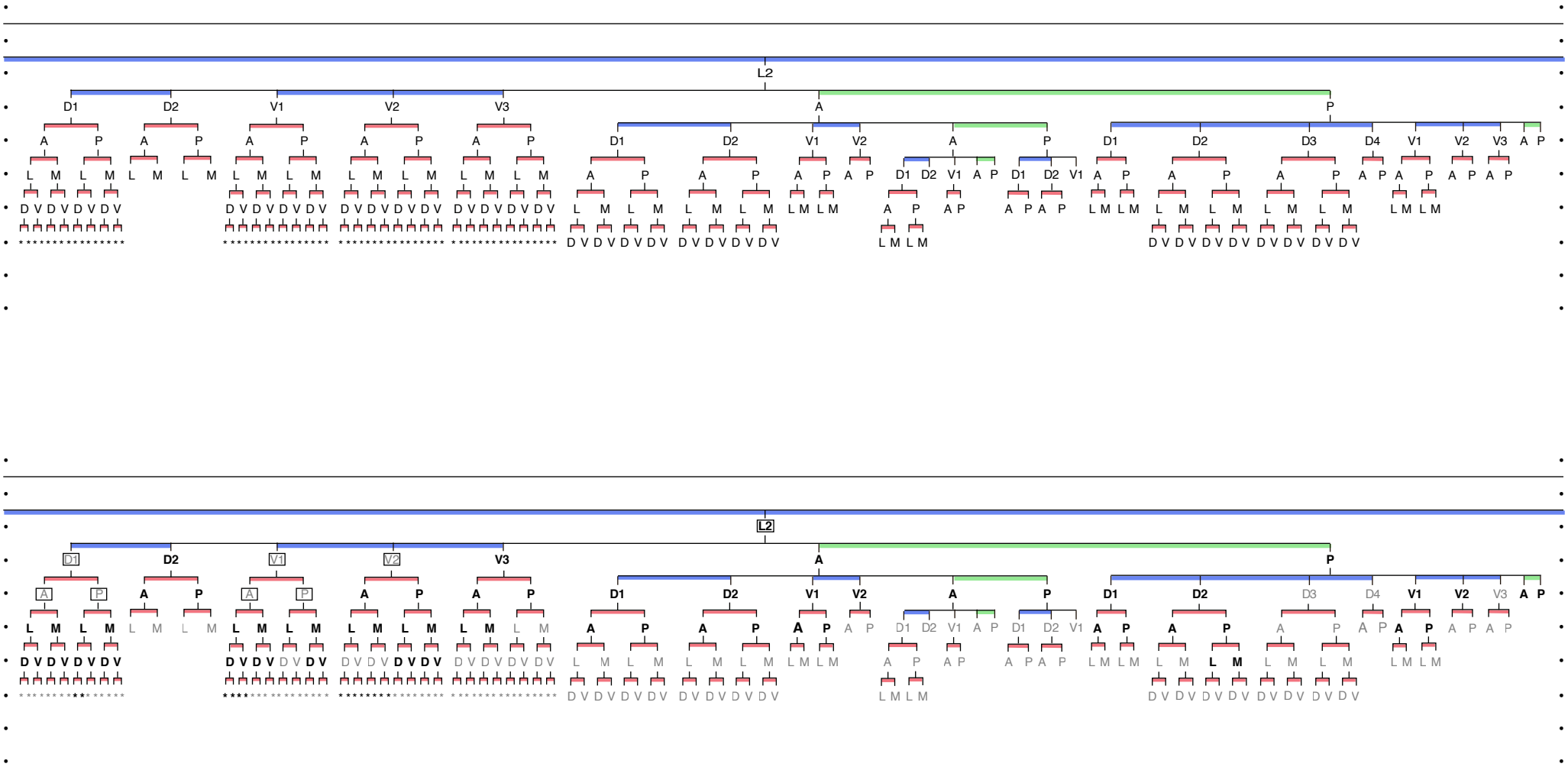
L2
D1 D2 V1 V2 V3 A P
A P A P A P A P A P
L M L M L M L M L M L M L M L M L M L M
D V D V D V D V D V D V D V D V D V D V
* * * * * * * * * * * * * * * *
D1 D2 V1 V2 A P
A P A P A P A P D1 D2 V1 A P D1 D2 V1 A P
L M L M L M L M L M L M L M L M
D V D V D V D V D V D V D V D V
A P A P A P A P
L M L M L M L M L M L M
D1 D2 D3 D4 V1 V2 V3 A P
A P A P A P A P A P A P
L M L M
D V D V D V D V D V D V D V D V

L2
D1 D2 V1 V2 V3 A P
A P A P A P A P A P
L M L M L M L M L M L M L M L M L M L M
D V D V D V D V D V D V D V D V D V D V
* * * * * * * * * * * * * * * *
D1 D2 V1 V2 A P
A P A P A P A P D1 D2 V1 A P D1 D2 V1 A P
L M L M L M L M L M L M L M L M
D V D V D V D V D V D V D V D V
A P A P A P A P
L M L M L M L M L M L M
D1 D2 D3 D4 V1 V2 V3 A P
A P A P A P A P A P A P
L M L M
D V D V D V D V D V D V D V D V

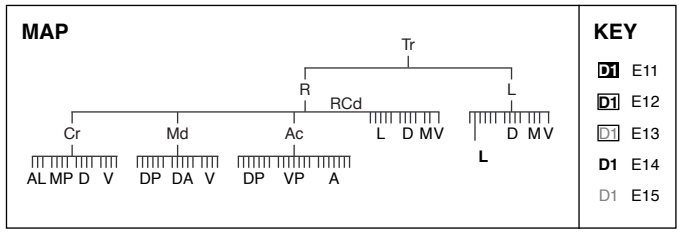
MAP
Tr
R
L
RCd
Cr
Md
Ac
L D MV
D MV
L
AL MP D V
DP DA V
DP VP A
KEY
D1 E11
D1 E12
D1 E13
D1 E14
D1 E15

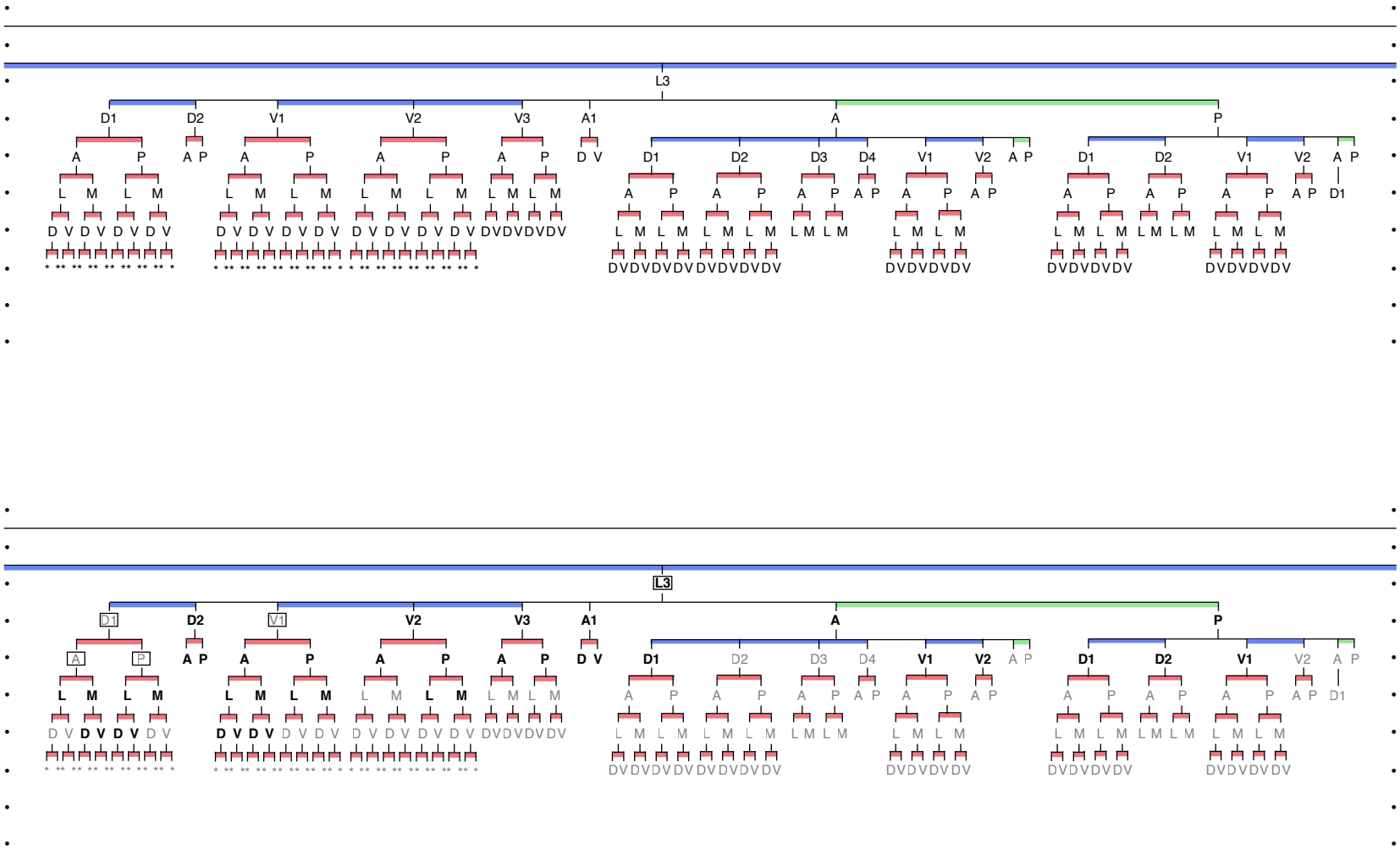
L3
D1 D2 V1 V2 V3 A1 A P
A P A P A P A P D V
L M L M L M L M L M L M L M L M
D V D V D V D V D V D V D V D V D V D V D V D V D V D V D V D V D V D V
* ** ** ** ** ** ** ** *
D1 D2 D3 D4 V1 V2 A P
D1 D2 V1 V2 A P D1
DVDVDVD

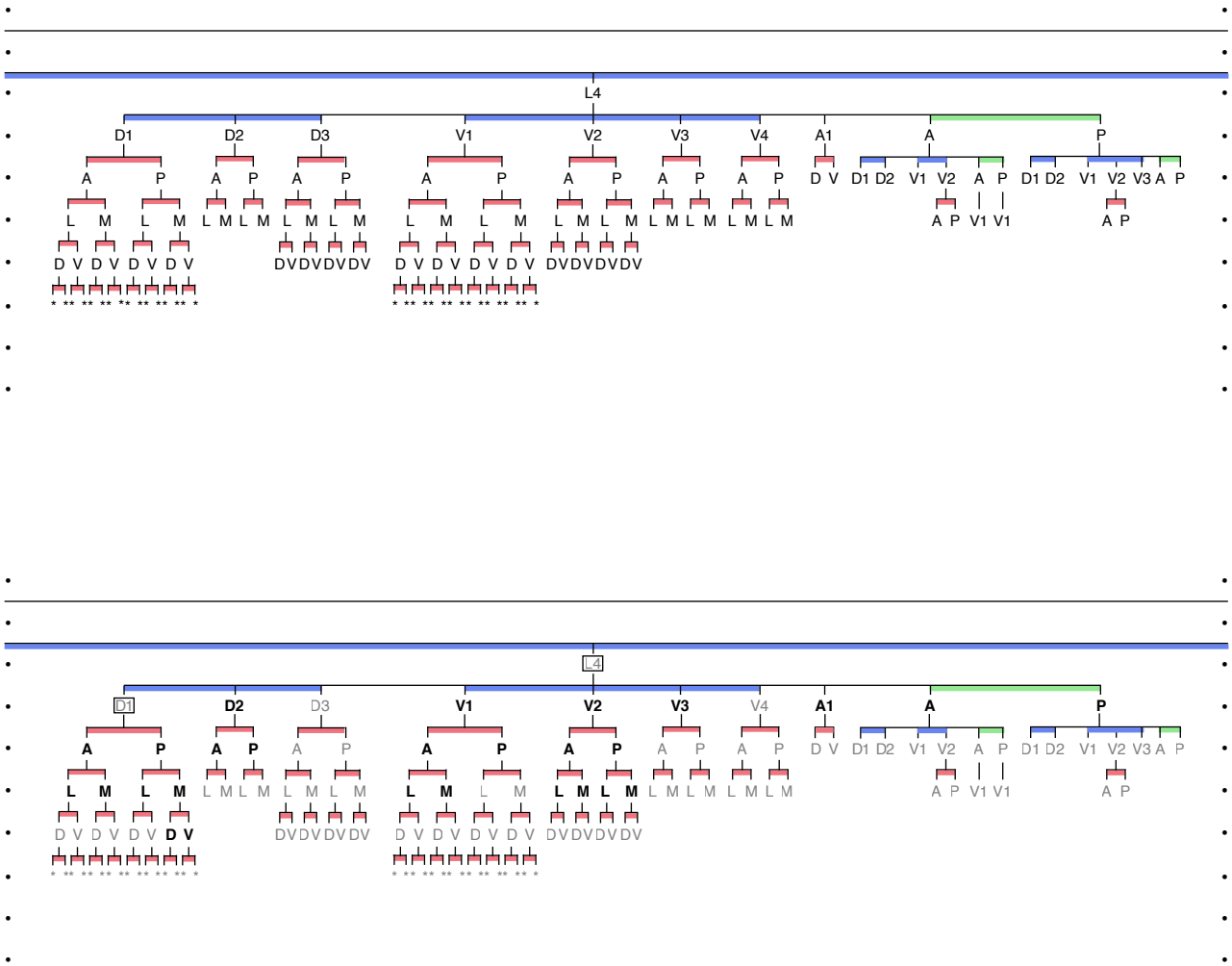

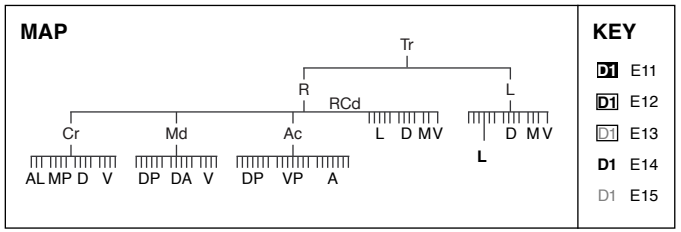

KEY

- D1 E11
- D1 E12
- D1 E13
- D1 E14
- D1 E15

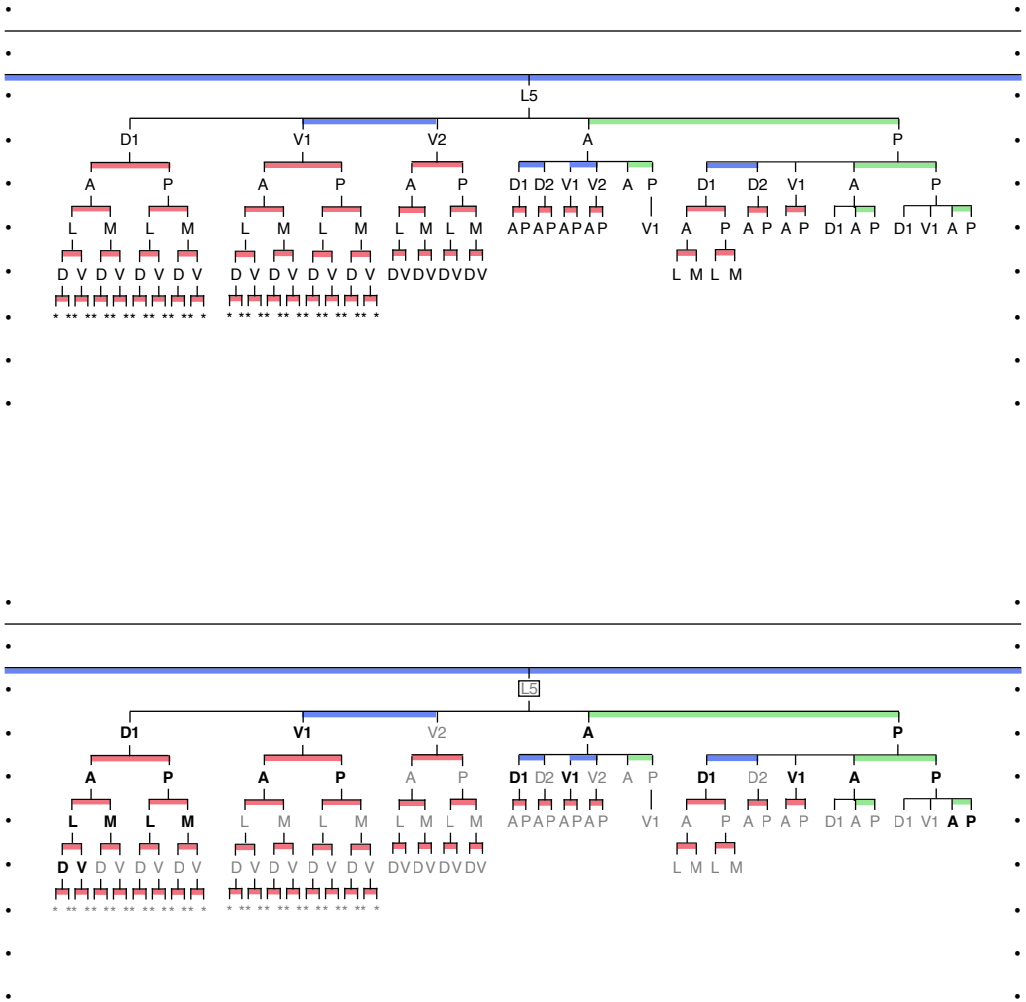

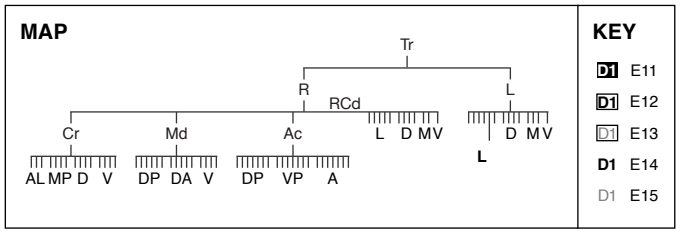

KEY

- D1 E11
- D1 E12
- D1 E13
- D1 E14
- D1 E15

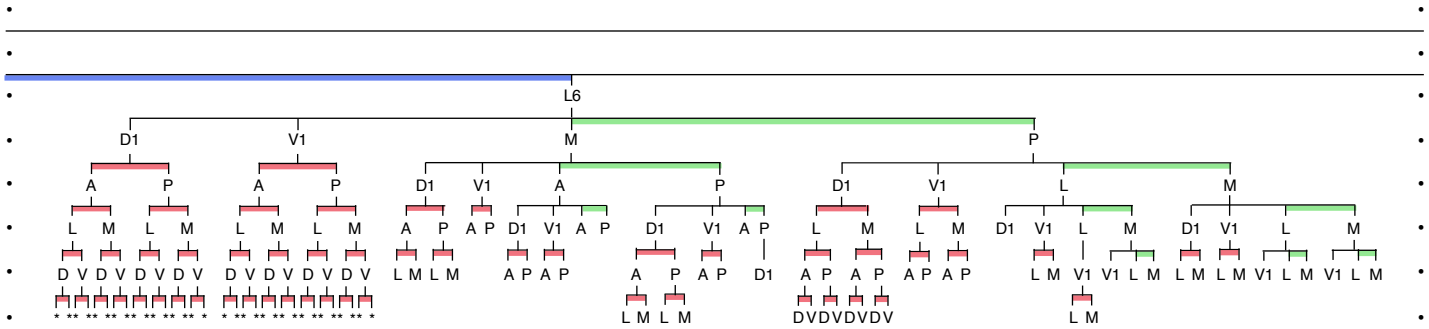
L6
D1 V1 M P
A P A P D1 V1 A P D1 V1 L M
L M L M L M L M A P A P D1 V1 A P D1 V1 A P L M L M D1 V1 L M D1 V1 L M
D V D V D V D V D V D V D V D V L M L M A P A P A P D1 A P A P A P A P L M V1 V1 L M L M L M V1 L M V1 L M
* ** ** ** ** ** ** ** * * ** ** ** ** ** ** ** * L M L M DVDVDVDV L M

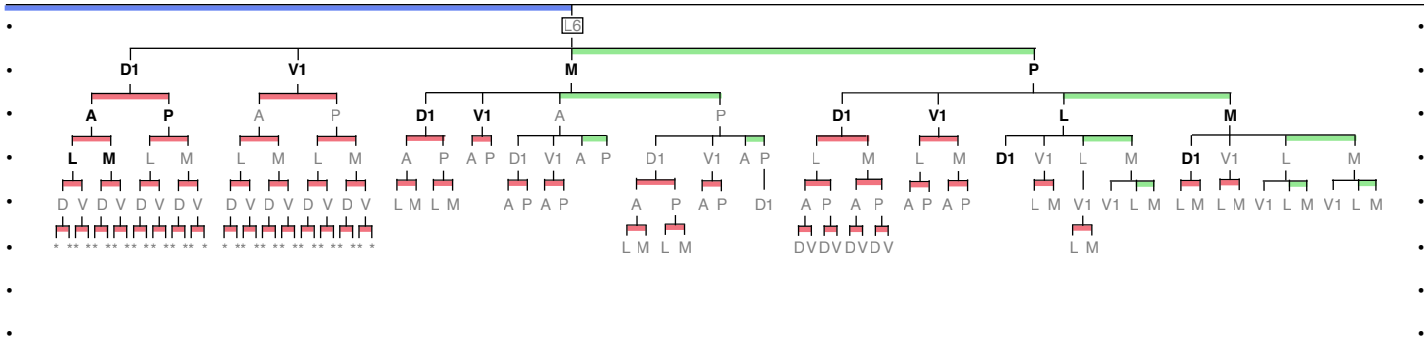
L6
D1 V1 M P
A P A P D1 V1 A P D1 V1 L M
L M L M L M L M A P A P D1 V1 A P D1 V1 A P L M L M D1 V1 L M D1 V1 L M
D V D V D V D V D V D V D V D V L M L M A P A P A P D1 A P A P A P A P L M V1 V1 L M L M L M V1 L M V1 L M
* ** ** ** ** ** ** ** * * ** ** ** ** ** ** ** * L M L M DVDVDVDV L M

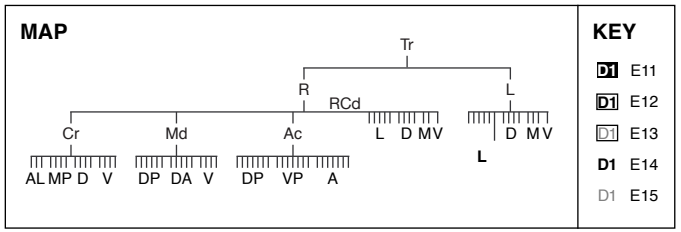
MAP
Tr
R
RCd
L
Cr
Md
Ac
L D MV
D MV
L
AL MP D V
DP DA V
DP VP A
KEY
D1 E11
D1 E12
D1 E13
D1 E14
D1 E15

P. 29 — L.D1-4, L.M1-3, L.V1 lineages

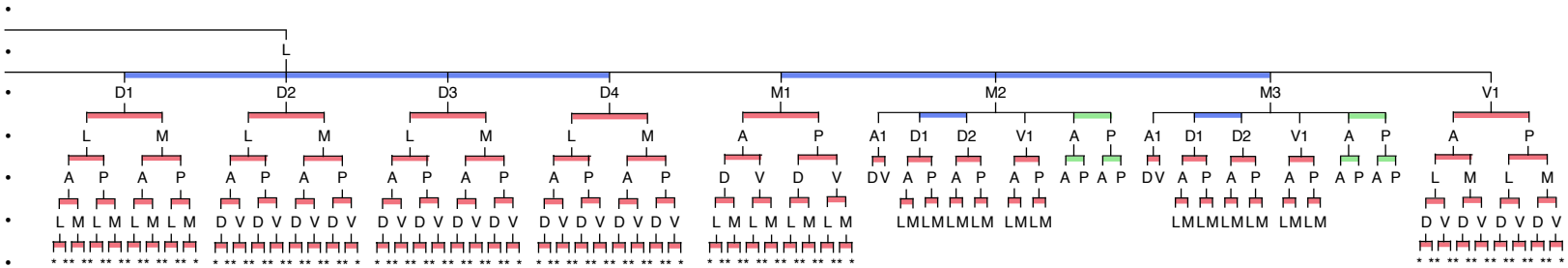

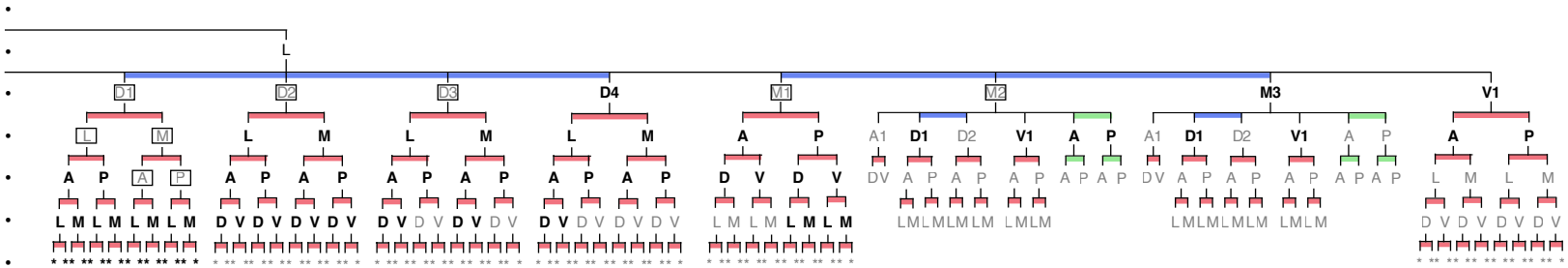

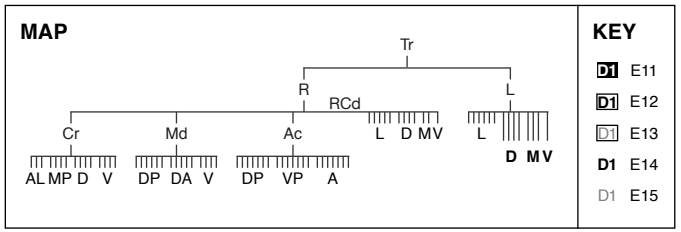

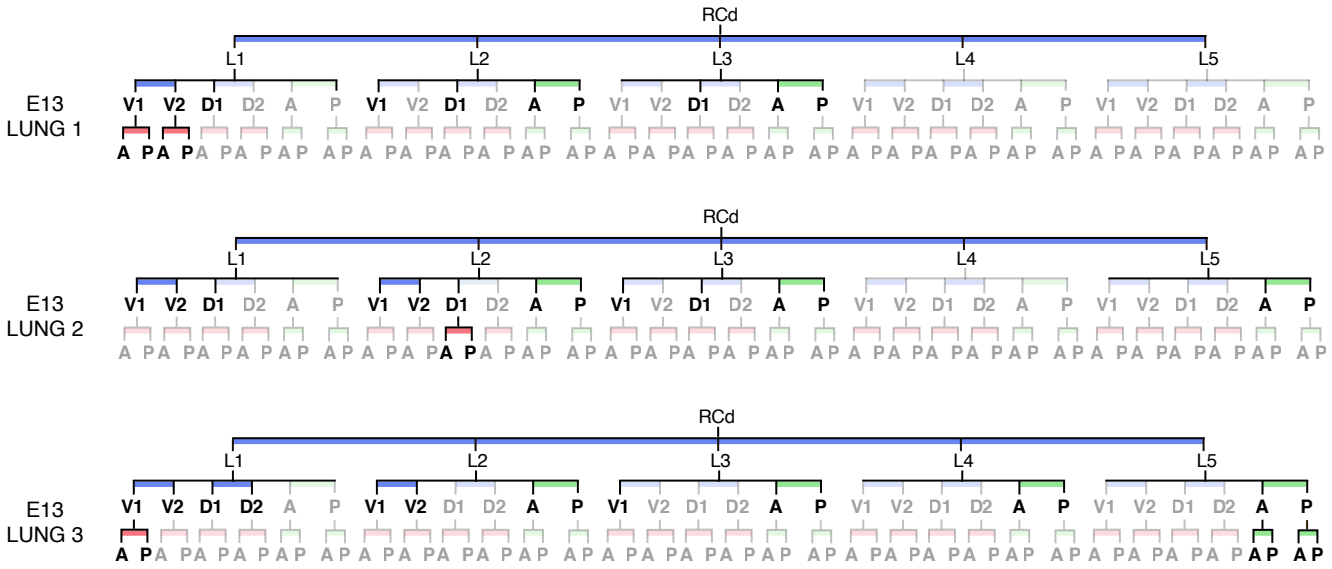

Supplementary Figure 2. Temporal variability in branching. Diagrams showing progress through the RCd.L1-5 lineages for three E13 lungs. Branches that have not yet formed are in gray. Note that L1.V1 and V2 lineages are most advanced in lung 1, L2.D1 lineage is most advanced in lung 2, and L1.V1 and L5.A and P are most advanced in lung 3.

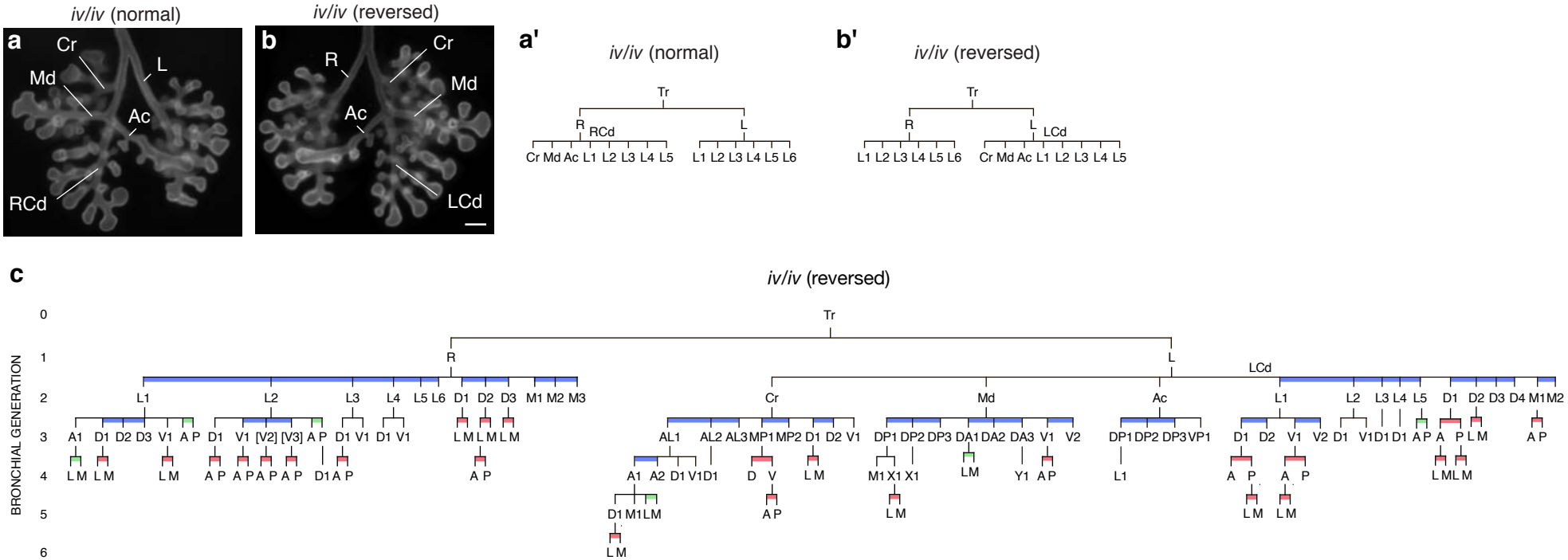

Supplementary Figure 3. Left-right reversal of branch lineage in an *iv* mutant. (**a**, **b**) E13.5 lungs from iv/iv mice showing normal (**a**) and left-right reversal (**b**) of branch and lobation pattern. (**a'**, **b'**) Lineage diagrams of major branches of normal (**a'**) and reversed (**b'**) lungs in **a** and **b**. (**c**) Full lineage diagram of reversed lung in **b**. The branching pattern is a complete mirror reversal of the normal lineage (Supplementary Fig. 1), with the exception of the two bracketed branches in the R.L2 lineage (R.L2.V2 and R.L2.V3), which are missing in the *iv/iv* lung. The missing branches are examples of "skipping a generation," a type of branching error also seen sporadically in wild type lungs (see text and Fig. 4d, d'). Bar, 200 µm.

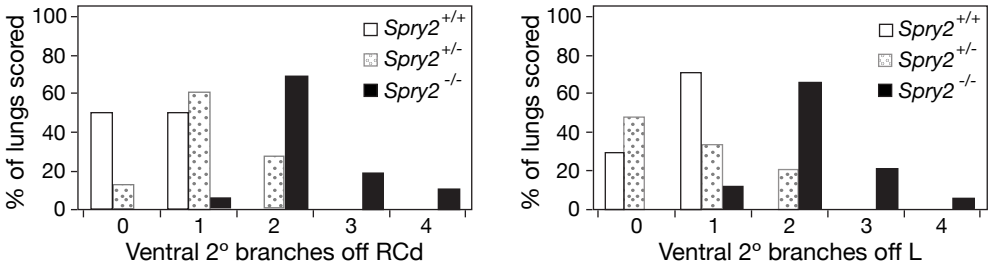

Supplementary Figure 4. Effect of a sprouty2 null mutation on domain branching. Values shown are the number of ventral 2º branches in the right caudal (RCd) and left (L) lobes of lungs from E12.5 – E16.5 *Spry2*$^{+/+}$ (for RCd, n=8; for L, n=7), *Spry2*$^{+/-}$ (for RCd, n=15; for L, n=14), and *Spry2*$^{-/-}$ (for RCd, n=22; for L, n=20) embryos. Ventral 2º branches are first observed at E12.5 in *Spry2*$^{+/+}$ lungs. The number of ventral branches is significantly increased in *Spry2*$^{-/-}$ relative to *Spry2*$^{+/+}$ wild type controls ($p < 0.0002$ using two-tailed Fisher exact test), and there was a smaller but still significant effect in *Spry2*$^{+/-}$ heterozygotes ($p < 0.0001$).

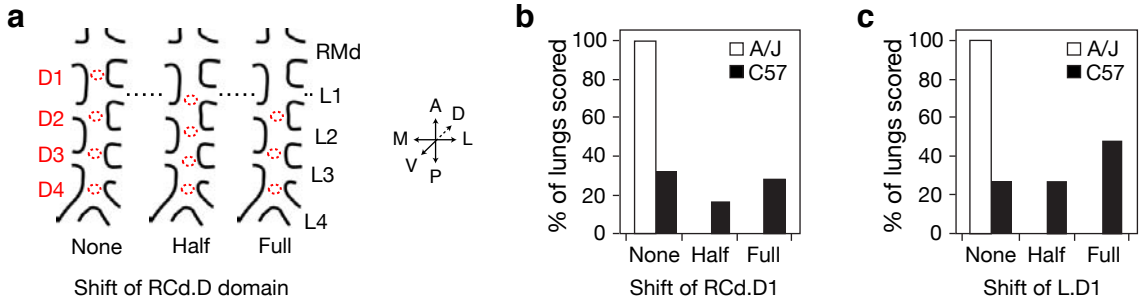

Supplementary Figure 5. Alteration in proximal-distal domain position in C57BL/6J (shifty) mice. **a**, Schematic representations of the normal register of dorsal (D) domain and lateral (L) domain branches off RCd, where each D branch (e.g. D1) is located just proximal to the corresponding L branch (e.g. L1), and the register in lungs in which the D domain is shifted distally along RCd by a half or full unit relative to the L domain. Note that the origins of all branches in the dorsal domain (circles) are affected, and that when the domain is shifted by a full unit, only three dorsal branches were present. (**b**, **c**) Percentage of lungs from A/J (open boxes; n = 21) and C57BL/6J ("shifty"; filled boxes; n =19) embryos in which the dorsal branch RCd.D1was located proximal (no shift), at the same level (half shift), or distal (full shift) to RCd.L1 (**b**) and the dorsal branch L.D1 was located proximal (no shift), at the same level (half shift), or distal (full shift) to L.L2 (**c**).

SUPPLEMENTARY METHODS

Dissection and Fixation

Embryos were dissected in cold (4ºC) Ca^{2+}- and Mg^{2+}-free phosphate-buffered saline, pH 7.4 (PBS). For E14.5 and younger lungs, specimens were fixed in 4% paraformaldehyde/PBS (w/v) at 4°C, with gentle rocking for 1 hour. Paraformaldehyde (Sigma) was dissolved in PBS at 60ºC, and aliquots were stored at –20ºC and thawed immediately before use. Fixed lungs were washed in PBS twice for 10 minutes at room temperature, with gentle rocking. Lungs were then dehydrated by washing once as above in 25% methanol/PBS (v/v), once in 50% methanol/PBS, once in 75% methanol/PBS, and twice in 100% methanol. Dehydrated lungs were stored at -20°C in 100% methanol and used within a few months for best results.

For E15.5 and older lungs, lungs were fixed in DMSO:methanol (1:4) at 4°C, with gentle rocking overnight. Fixed lungs were then incubated for 5-10 hours in 30% H_2O_2:DMSO:methanol (1:1:4) at room temperature, with gentle rocking, then stored at -20°C in 100% methanol as above.

Whole mount antibody staining with anti-E-Cadherin

Day 1:

1. Dehydrated specimens in 100% methanol were placed into 5 ml polystyrene round-bottom tubes (Falcon).
2. For E14.5 and younger lungs, lungs were incubated for 5 hours in 5% H_2O_2/methanol at room temperature, with gentle rocking. For E15.5 and older lungs, steps 2 and 3 were omitted.

3. Lungs were washed twice for 10 minutes in 100% methanol at room temperature, with gentle rocking.

4. Lungs were washed once as above in 75% methanol/PBT (PBT: 0.1% Tween-20/PBS).

5. Lungs were washed as above in 50% methanol/PBT.

6. Lungs were washed as above in 25% methanol/PBT.

7. Lungs were washed twice as above in 100% PBT.

8. Blocking was done by incubating specimens twice for 1 hour in 5% rabbit serum (Invitrogen)/PBS/0.5% Triton X-100 at room temperature, with gentle rocking.

9. After blocking, primary antibody staining was carried out by incubating lungs overnight (or 2-3 nights for E14.5 or older lungs) at 4°C with anti E-Cadherin antibody (Zymed; clone ECCD-2) diluted 1:1000 in 5% rabbit serum/PBS/0.5% Triton X-100, with gentle rocking. The final volume was at least 1 ml, depending on the number and size of lungs.

Day 2:

1. Lungs were washed five times for 1 hour at 4°C with 5% rabbit serum/PBS/0.5% Triton X-100, with gentle rocking.

2. Secondary antibody staining was done by incubating lungs overnight at 4°C with biotin-conjugated rabbit anti-rat IgG (Vector) diluted 1:250 in 5% rabbit serum/PBS/0.5% Triton X-100, with gentle rocking.

Day 3:

1. Lungs were washed five times as on Day 2.

2. ABC Elite reagent (Vector; VECTASTAIN Elite ABC Kit, catalog number PK-6100) was prepared by adding 2 drops (100 μL reagent A) to 5 ml 5% rabbit serum/PBS/0.5% Triton X-100, mixing, then adding 2 drops (100 μL reagent B per 5 ml), mixing again, and letting the mixture stand for 30 minutes at room temperature.

3. Lungs were incubated with ABC Elite reagent for 2 hours at room temperature, with gentle rocking.

4. Lungs were washed three times for 30 minutes in PBT at room temperature, with gentle rocking. For convenience, some specimens were left in PBT overnight at 4ºC.

5. Tyramide solution was prepared by letting Fluorescein Tyramide Reagent (Perkin Elmer SAT701; Individual fluorescein tyramide reagent pack) stand at room temperature until it was liquid, then diluting it 1:100 in Amplification Diluent. The diluted reagent was used immediately.

6. Lungs were incubated with the diluted Tyramide reagent for 30 minutes at room temperature, with rocking.

7. Lungs were washed with PBT at least 3-5 times for 15-30 minutes at room temperature, with gentle rocking.

8. Stained lungs were mounted and stored in Vectashield (Vector) at 4ºC or -20°C. Stained lungs were stored for months or years with no obvious degradation in staining.

Whole mount antibody staining with anti-Smooth Muscle α-Actin

Day 1:

1. The same procedure as step 1 of Day 1 above was used.

2-7. For E14.5 and younger lungs, steps 2-7 of Day 1 above were used. For E15.5 and older lungs, steps 4-7 were used.

8. Blocking was done as in step 8 of Day 1 above except that 5% fetal bovine serum/3% bovine serum albumin/PBS/0.5% Triton X-100 (FBPT) was used.

9. Primary antibody staining was done as above in step 9 of Day 1 except the antibody was Cy3-conjugated anti-Smooth Muscle α-Actin antibody (Sigma; clone 1A4) that was diluted 1:200 in FBPT.

Day 2:

1. Washing was done as on Day 2 above with FBPT.

2. The next wash was done overnight at 4°C with PBT.

Day 3:

1. Specimens were fixed again in 4% paraformaldehyde/PBS at 4°C, with gentle rocking for 1 hour, to preserve the antibody staining.

2. Specimens were washed twice for 15 minutes in PBS at room temperature, with gentle rocking.

3. Specimens were washed again for 15 minutes in PBT at room temperature, with gentle rocking.

4. Specimens were dehydrated through PBT/methanol series into 100% methanol as described above in the Dissection and Fixation protocol.

5. For E14.5 and younger lungs, lungs were mounted and stored in Vectashield (Vector) at 4ºC. For E15.5 and older lungs, lungs were mounted and stored in benzyl alcohol:benzyl benzoate (1:2) in glass at 4ºC. Lungs were stored for months or years without obvious degradation in staining.